Fixture MI-VELOA--02

Ref. FPMI042

KLUŚ Inspiring Solutions



CRI 90+ | IP20 | CE | UKCA | RoHS COMPLIANT | 4 YEARS WARRANTY

- Module for building shapes MI-SNAKE in the MIFOR-70 system
- Also applicable as a standalone lighting fixture
- Includes a light source and a wire suspension system
- Easy suspension height adjustment
- ETL Sanitation Listed
- Available 2D CAD and 3D BIM files in various formats enabling lighting design in architectural programs
- Luminaire without LED power supply included

TECHNICAL DRAWING

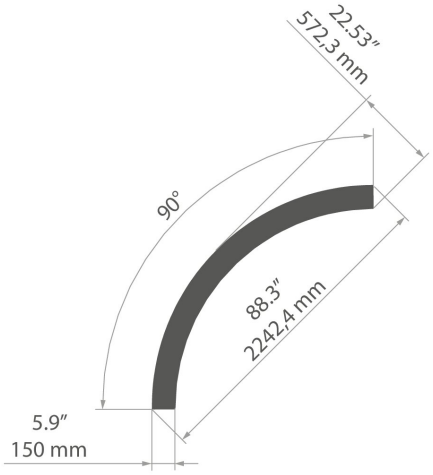

TECHNICAL SPECIFICATIONS

Material	**aluminum**
Cover	**frosted**
Control	**none**
Mounting type	**Suspended**
Length [L]	**88.3"**
Height [H]	**3.4"**
Width [W]	**22.5"**
Weight	**11.4 lb**
Lighting direction	**down**
IP protection rating	**20**
Luminare power	**70 W**
Color Rendering Index CRI	**90**
MacAdam's ellipse	**3 SDCM**

Color	Luminous flux of the fixture	Efficiency	Color temperature	Ref
silver anodized	6320 lm	90 lm/W	3000 K	**FPMI0**
silver anodized	6560 lm	94 lm/W	4000 K	**FPMI0**
black anodized	6320 lm	90 lm/W	3000 K	**FPMI0**
black anodized	6560 lm	94 lm/W	4000 K	**FPMI0**
white lacquered mat	6320 lm	90 lm/W	3000 K	**FPMI0**
white lacquered mat	6560 lm	94 lm/W	4000 K	**FPMI0**

Fixture MI-VELOA--02

Ref. FPMI042

Input voltage	**24 V**
Protection class	**III**
Working temperature	**50°F - 95°F**
Warranty [months]	**48**

SAMPLE PROJECTS





