ROLL-K

Installation and User Manual

Fully assembled luminaire

Installation: surface

CE • LVD • EMC • RoHS

24V

Table of Contents

About the product	2
Preparing the installation site	3
Electrical connection	5
Assembly and fixing of the luminaire	6
Finishing the installation	9
Maintenance, disposal, disassembly, EU compliance	10

DIMENSIONS:

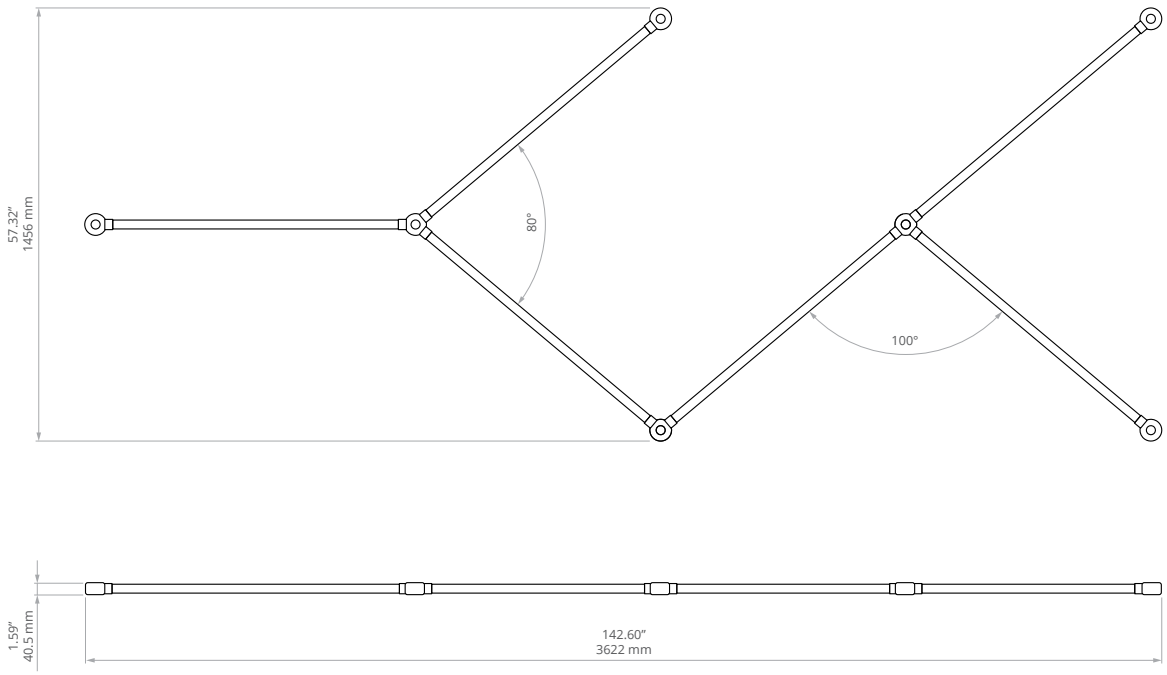

KLUŚ Sp. z o.o. ul. Słoneczna 126,
05-506 Kolonia Lesznowola
www.KlusDesign.eu

ROLL-K

is a ready-made lighting luminaire designed for surface mounting. The manual describes the standard mechanical installation and electrical connection of the luminaire.

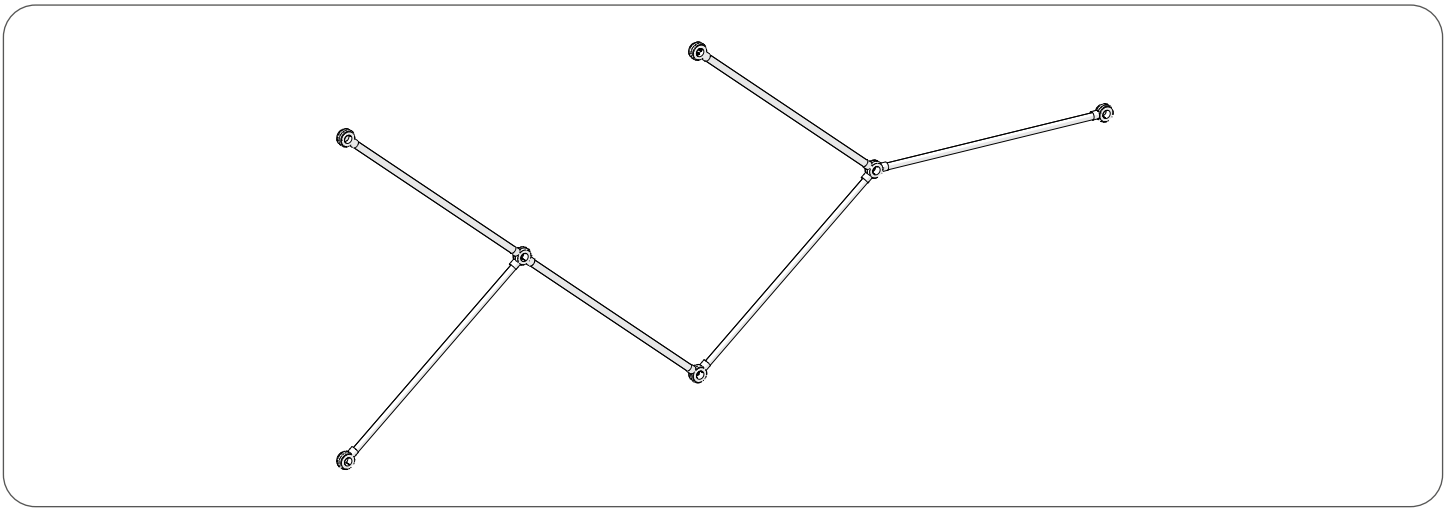

THE SET INCLUDES:

- ROLL-K Luminaire
- Suspension elements / mounting hardware (according to configuration)
- Manual

SET DOES NOT INCLUDE

- Screws and wall plugs selected for the substrate (not always included)
- Control elements (if present in the luminaire version)

REQUIRED TOOLS

- Drill
- Bubble level
- Screwdriver

SAFETY

- Disconnect the power supply before installation, cleaning, and servicing.
- Installation and connection should be performed by qualified personnel.
- Do not modify the luminaire.
- Use only compatible components.
- Do not use the product if it is damaged.

KLUŚ Sp. z o.o. ul. Słoneczna 126,
05-506 Kolonia Lesznowola
www.KlusDesign.eu

Preparing the installation site

- Preparation of mounting points and the power supply cable for the luminaire.

Step 1 - Prepare the 24V DC power cable

- Lead out the 24V DC power cable in the place intended for the luminaire.
- Make sure the cable is on the correct side relative to the planned position of the luminaire.
- Leave a cable slack to enable the electrical connection.



Step 2 — Determine the mounting points and prepare holes

- Determine the spacing of mounting points according to the dimensions of the luminaire.
- Mark all fixing points on the surface.
- Check if the points are located on one mounting axis.
- Drill holes at the designated locations. Insert wall plugs appropriate for the type of substrate.

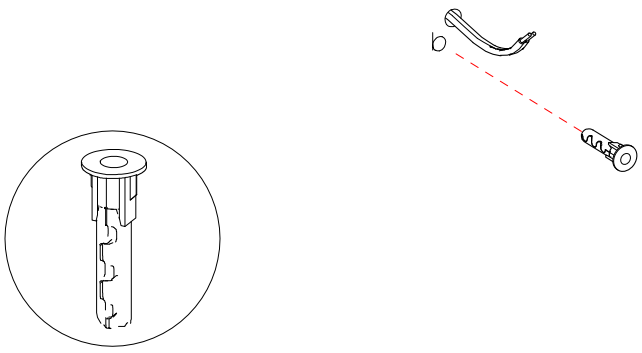

KLUŚ Sp. z o.o. ul. Słoneczna 126,
05-506 Kolonia Lesznowola
www.KlusDesign.eu

Electrical connection

- 24V DC Power supply.

RULES

- POWER SUPPLY: 24V DC Connect only with the power disconnected. After connecting, make sure the cable is secured and not strained.

Step 1 - Connect the cables

- Connect the 24V DC power cable with the luminaire cable.
- Maintain the correct polarity markings: plus to plus, minus to minus.
- Check the correctness and security of the connection.
- Arrange the cables so that they are not pinched during the installation of the luminaire.

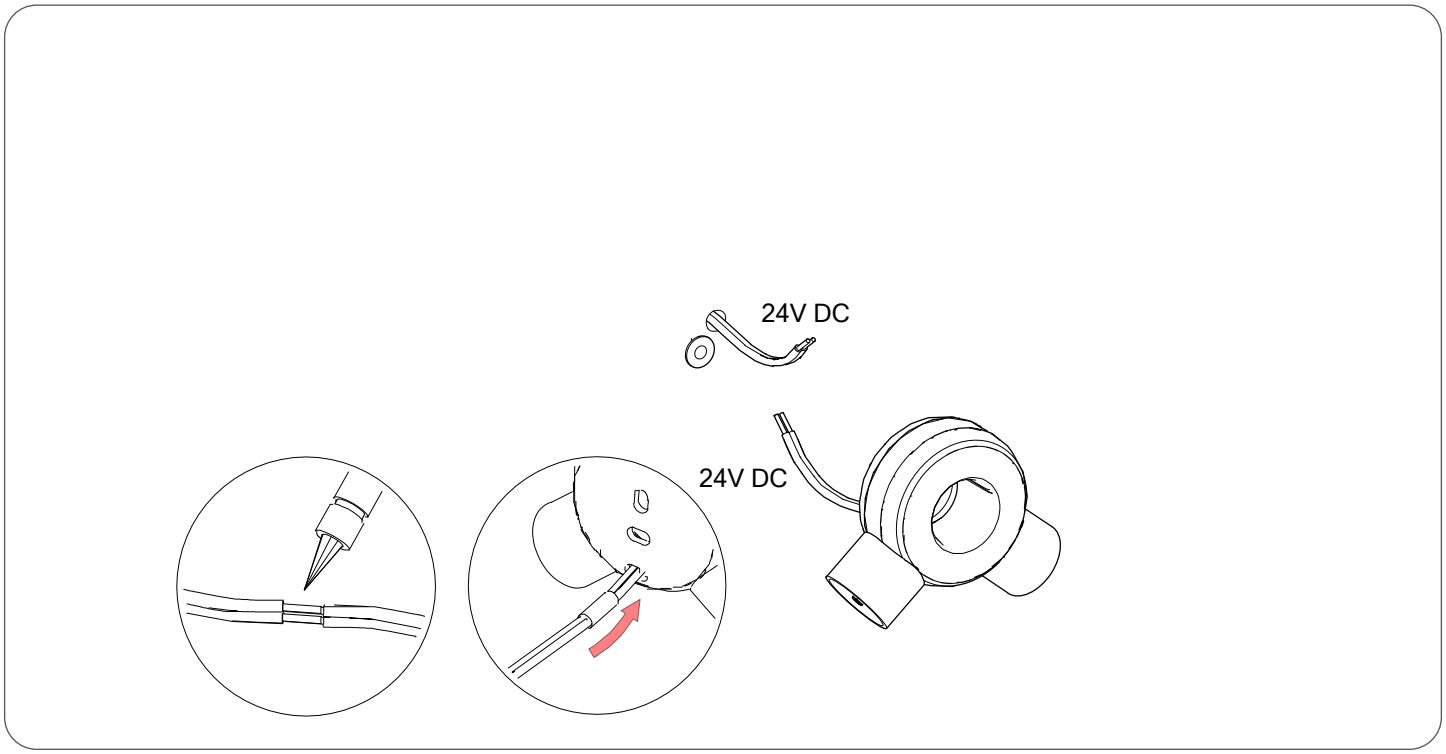

KLUŚ Sp. z o.o. ul. Słoneczna 126,
05-506 Kolonia Lesznowola
www.KlusDesign.eu

Assembly and fixing of the luminaire

- Installation of the first end element to the prepared surface and starting the assembly of the luminaire.

Step 1 — Fix the first element to the surface

- Position the mounting element at the prepared point. Insert the screw through the mounting hole of the element. Tighten the screw until the element is stably seated. Do not exceed the maximum screw head diameter: 5.5 mm.

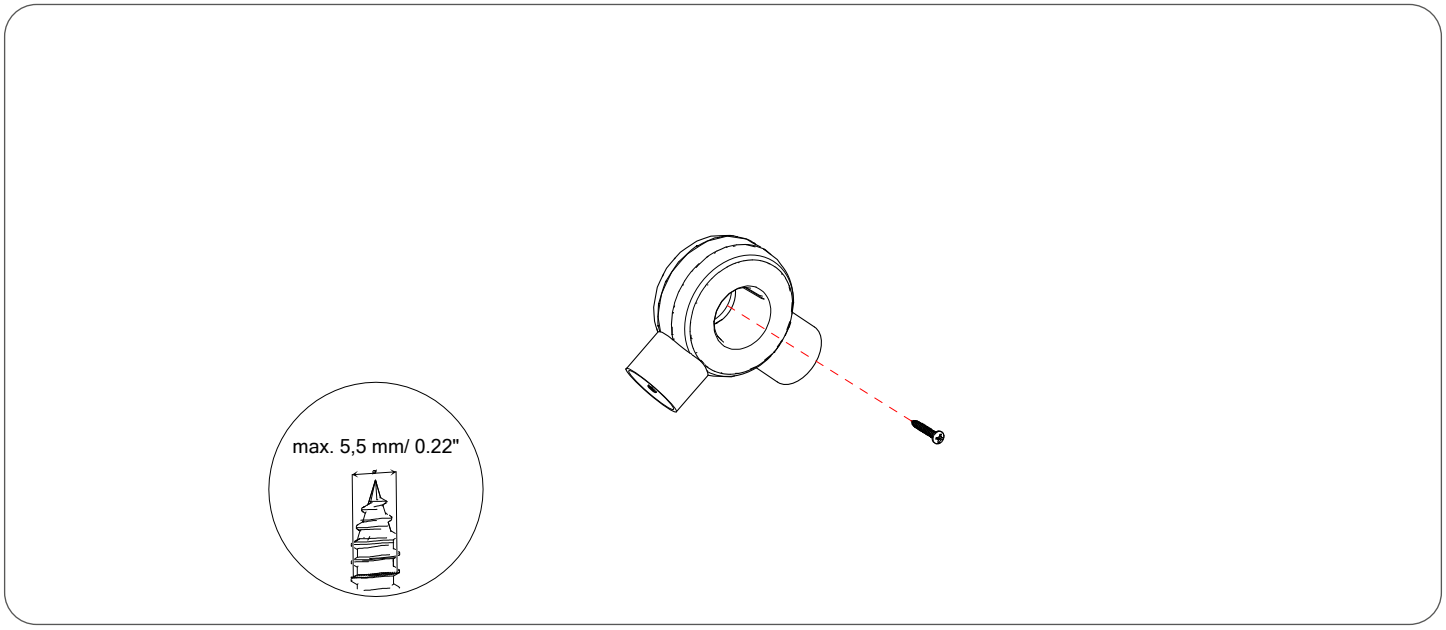

Step 2 — Slide the profile into the fixed element

- Position the profile according to the insertion direction shown in the drawing.
- Slide the end of the profile into the end element.
- Press the profile until fully seated. Check if the connection is even and stable.

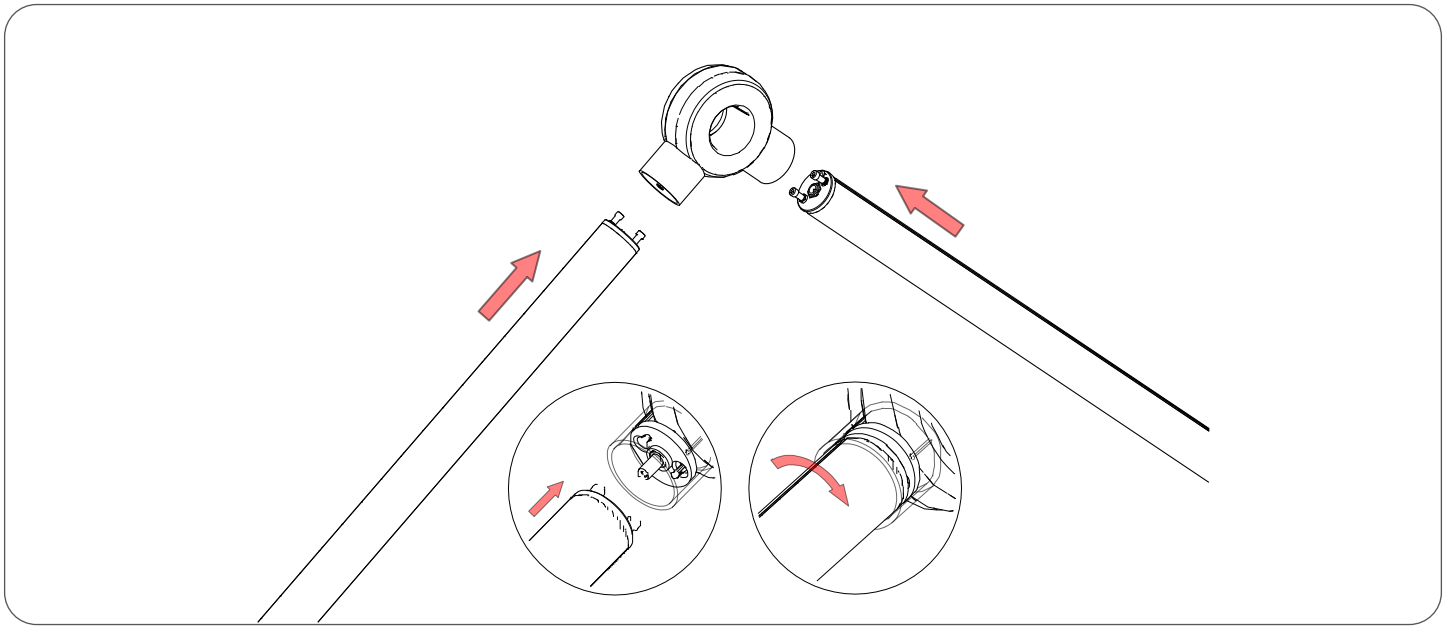

KLUŚ Sp. z o.o. ul. Słoneczna 126,
05-506 Kolonia Lesznowola
www.KlusDesign.eu

Assembly and fixing of the luminaire

- Supplementing the structure of the luminaire with subsequent end elements and preparing the profile for further fixing.

Step 3 - Install another profile end element

- Slide the end element into the other end of the profile.
- Press the element until fully seated.
- Check the correct fit of the element with the profile.

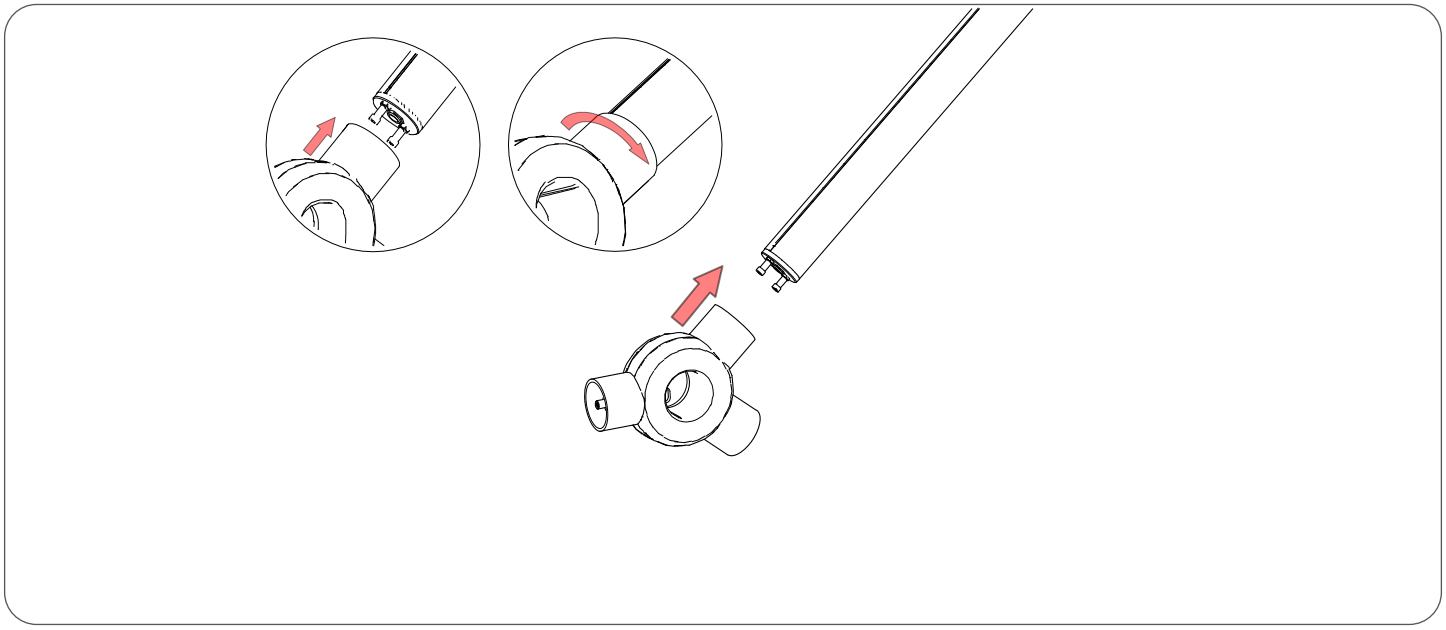

Step 4 - Adjust the position of the element relative to the profile

- Position the element in the position shown in the drawing.
- Check the alignment direction of the element before further tightening.
- Do not over-turn the element by force to avoid damaging the connection.

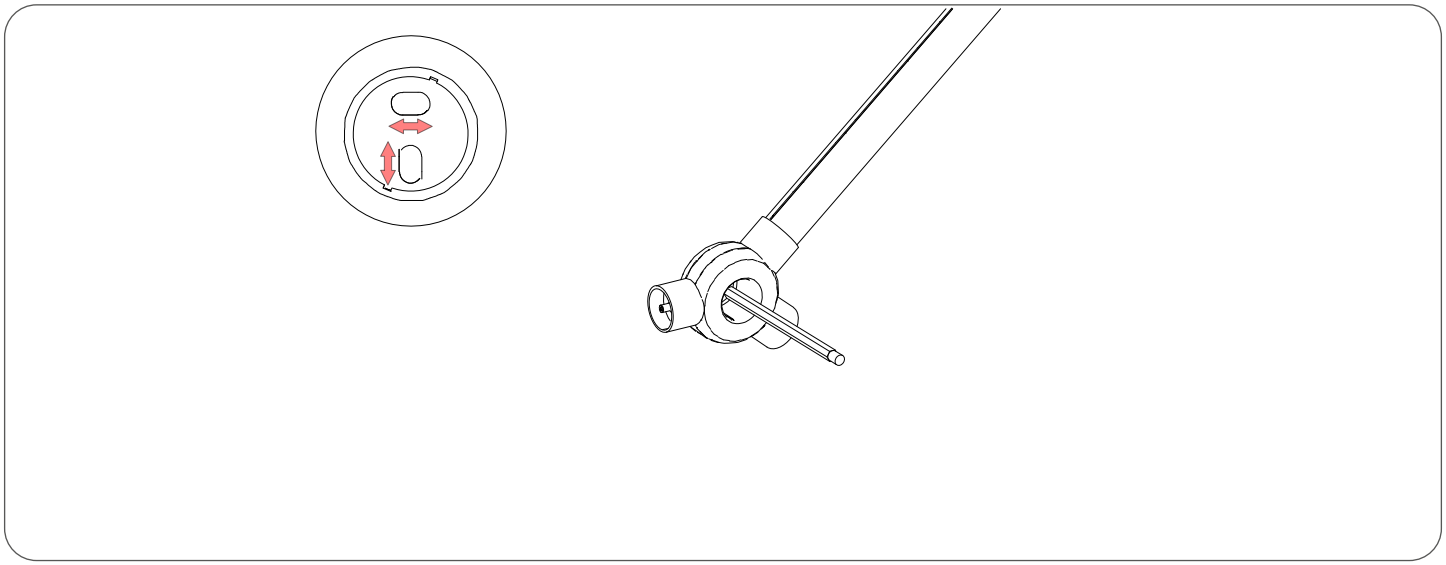

KLUŚ Sp. z o.o. ul. Słoneczna 126,
05-506 Kolonia Lesznowola
www.KlusDesign.eu

Assembly and fixing of the luminaire

- Determining subsequent fixing points and preparing holes for mounting elements.

Step 5 – Unclip the end element after establishing the profile position

- After setting the profile in the correct position, mark the location for fixing the element.
- Unclip the fixing element from the profile to gain access to the drilling site.
- Prepare the mounting hole for fixing the element.
- The element is unclipped temporarily and will be reinstalled in the next stage.

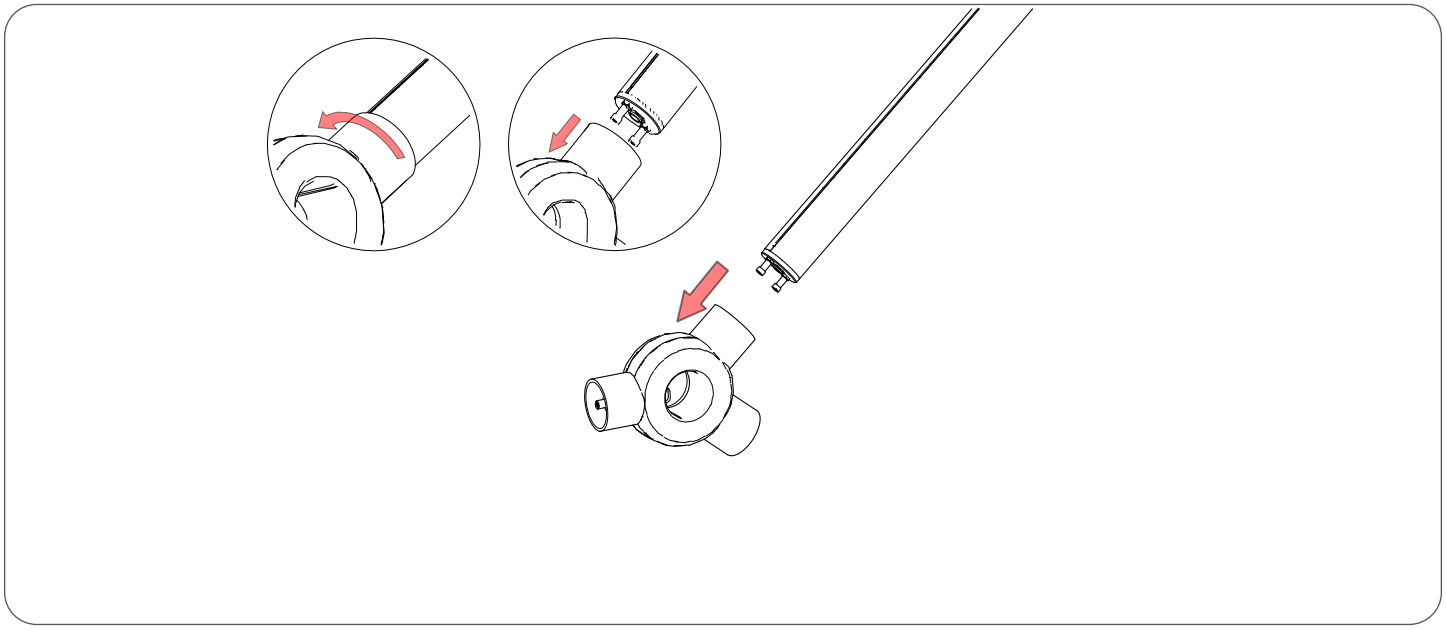

Step 6 — Prepare a hole for fixing the element

- Place the luminaire against the surface in the mounting position.
- Determine or check the fixing point of the element.
- Drill a hole according to the prepared mounting point.

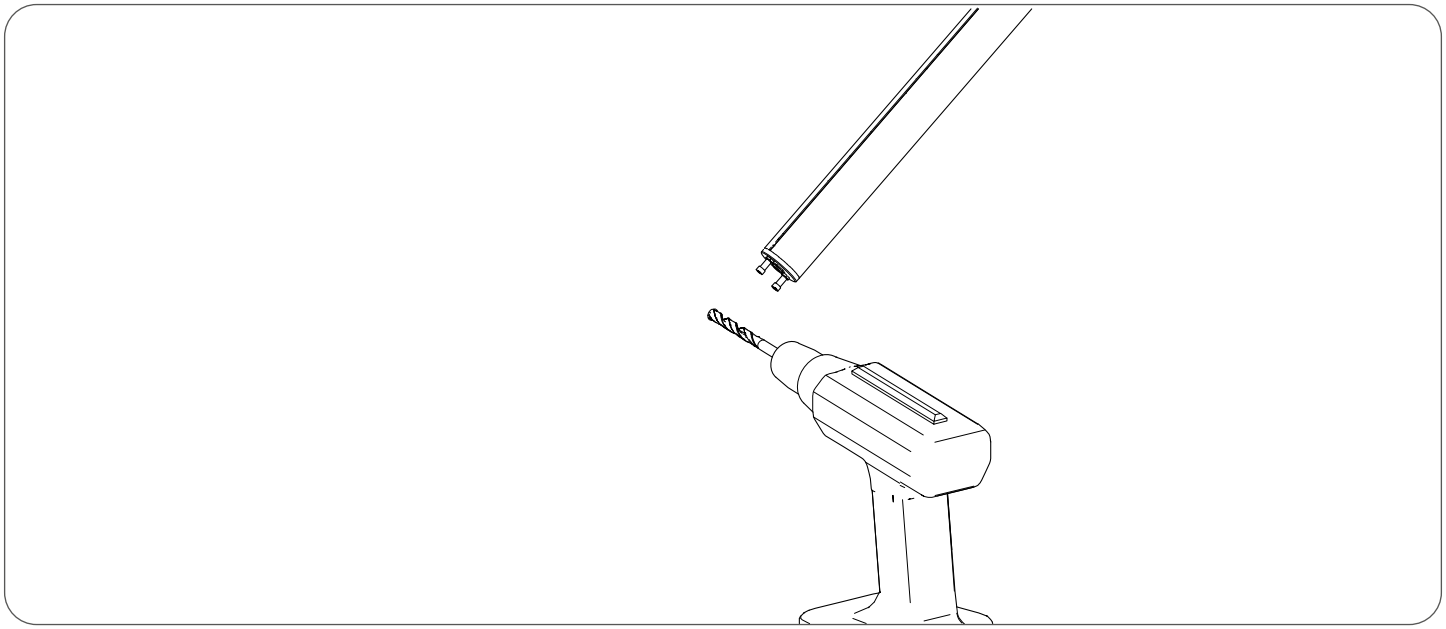

KLUŚ Sp. z o.o. ul. Słoneczna 126,
05-506 Kolonia Lesznowola
www.KlusDesign.eu

Assembly and fixing of the luminaire

- Fixing subsequent elements of the luminaire and closing mechanical connections.

Step 7 — Install another profile end element

- Insert the screw into the prepared fixing point. Tighten the element until it is stably seated against the surface.

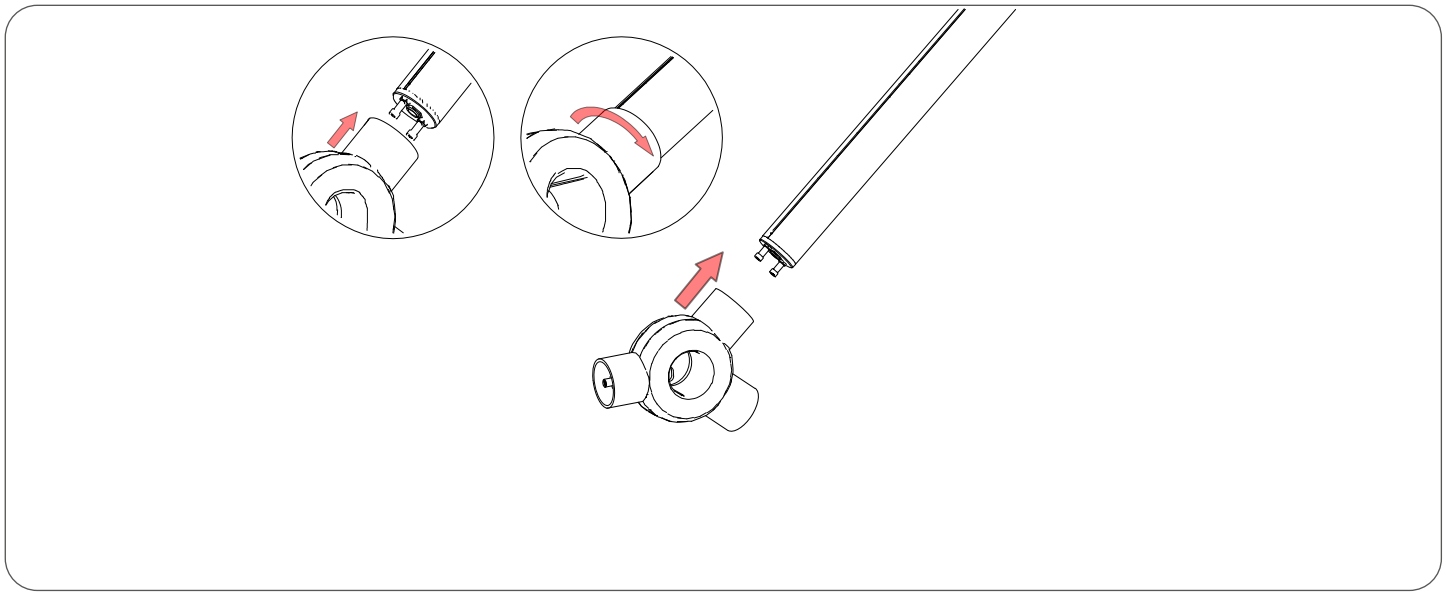

Step 8 — Close the connection of the profile with the element

- Insert the screw through the mounting hole of the element.
- Tighten the screw until the luminaire is stably seated.
- Do not exceed the maximum screw head diameter: 5.5 mm.
- Repeat the procedure for all remaining fixing points of the luminaire.
- Check the stability of the entire structure after fixing all elements.

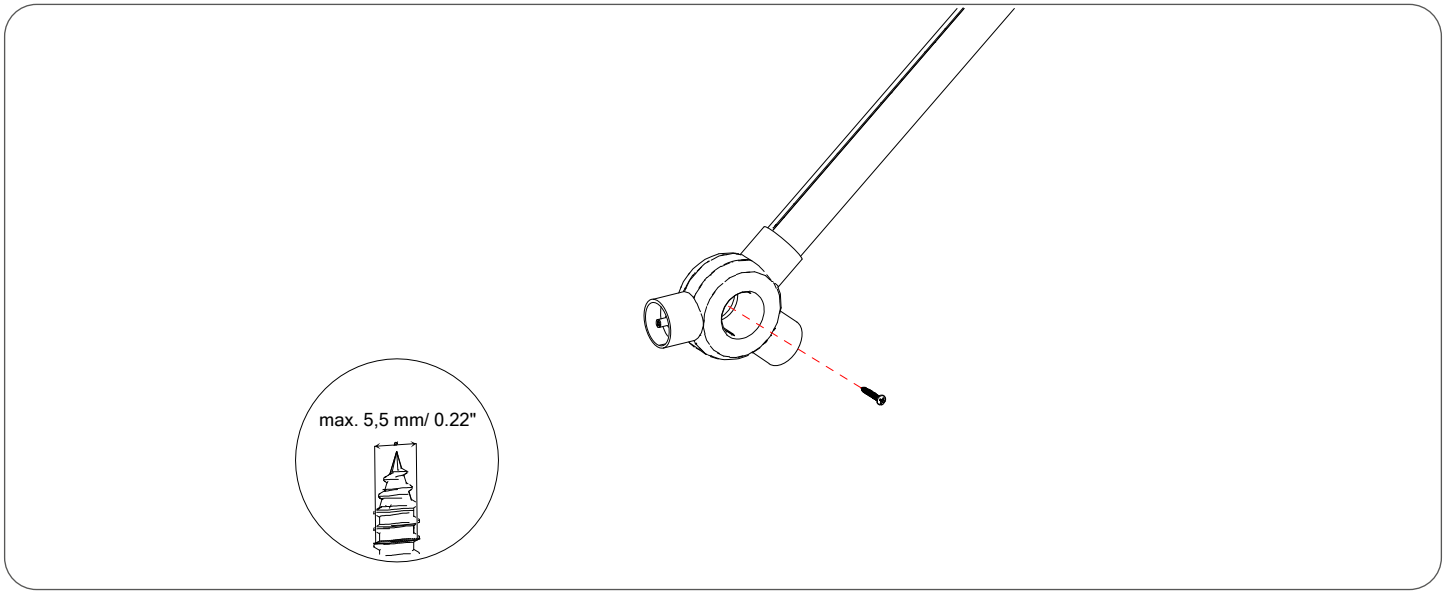

KLUŚ Sp. z o.o. ul. Słoneczna 126,
05-506 Kolonia Lesznowola
www.KlusDesign.eu

Finishing the installation

- Final inspection of the installation and operational check of the luminaire.

Step 1 — Install safety elements

- Insert the safety elements into the holes of the end elements.
- Press them until they are fully seated.
- Check that each fixing point has been closed and secured.

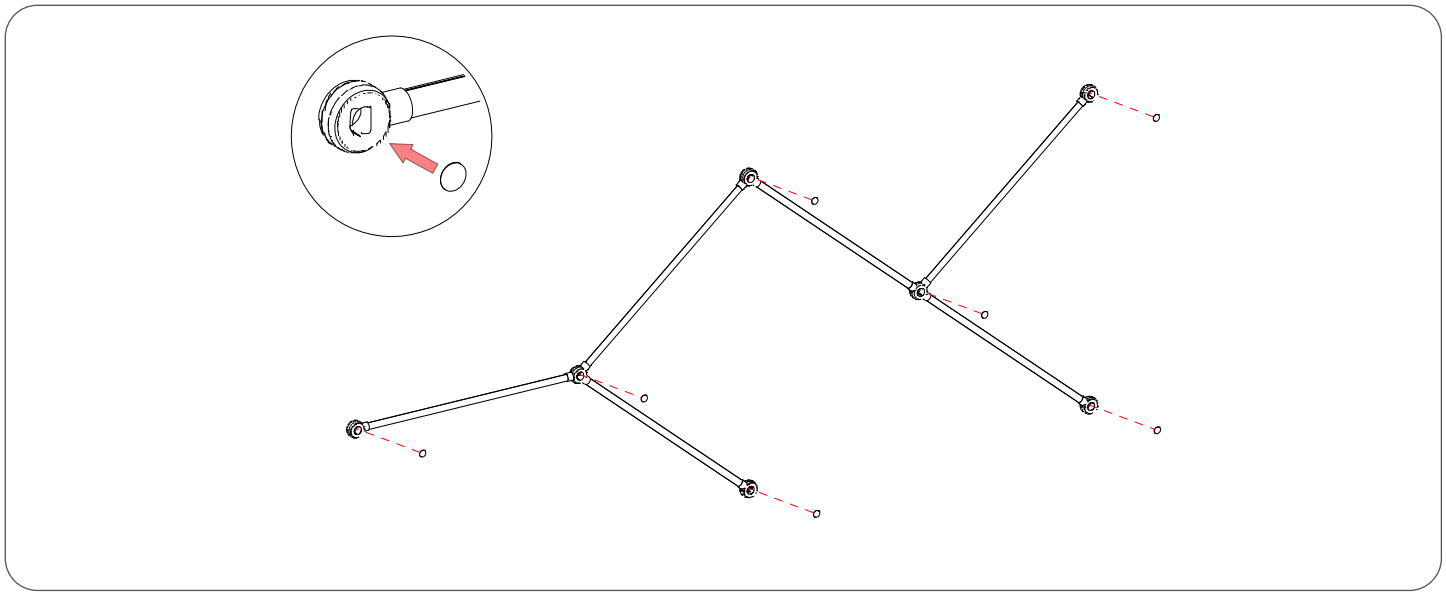

Step 2 - Perform final inspection

- Check the stability of all fixing points.
- Make sure the safety elements are correctly seated.
- Check that the cables are not visible, strained, or pinched.
- Turn on the power and perform an operational test of the luminaire.

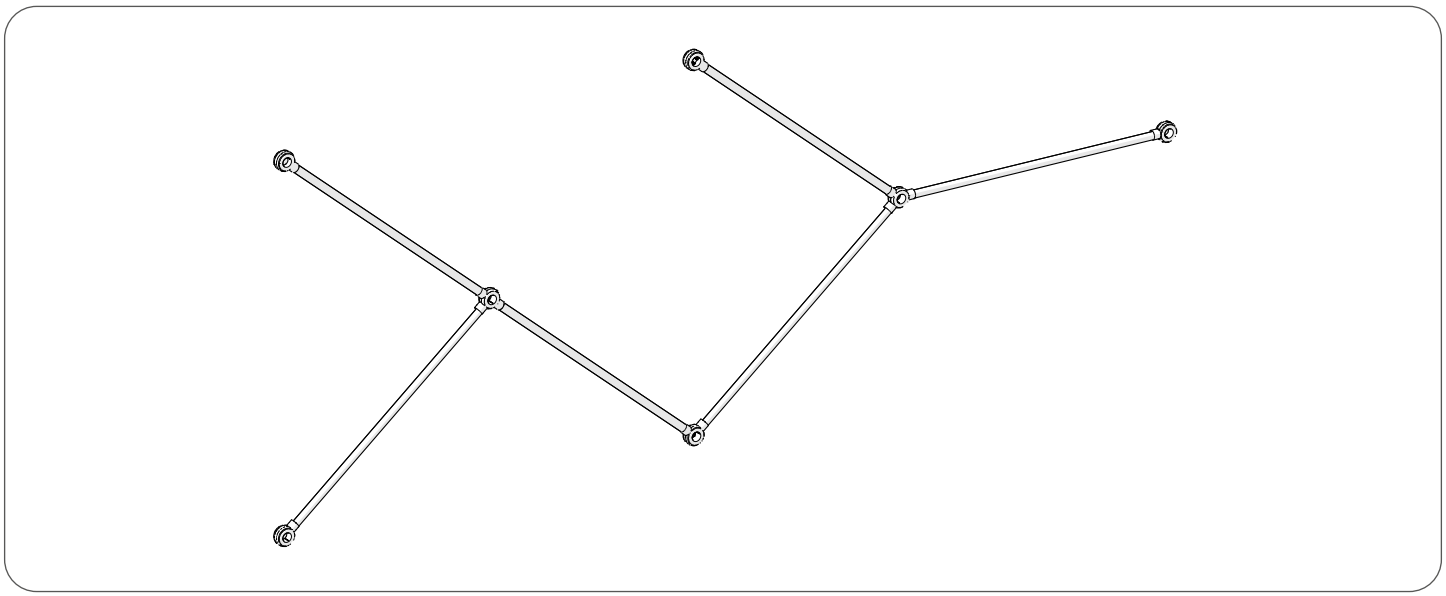

KLUŚ Sp. z o.o. ul. Słoneczna 126,
05-506 Kolonia Lesznowola
www.KlusDesign.eu

Maintenance, disposal, disassembly, EU compliance

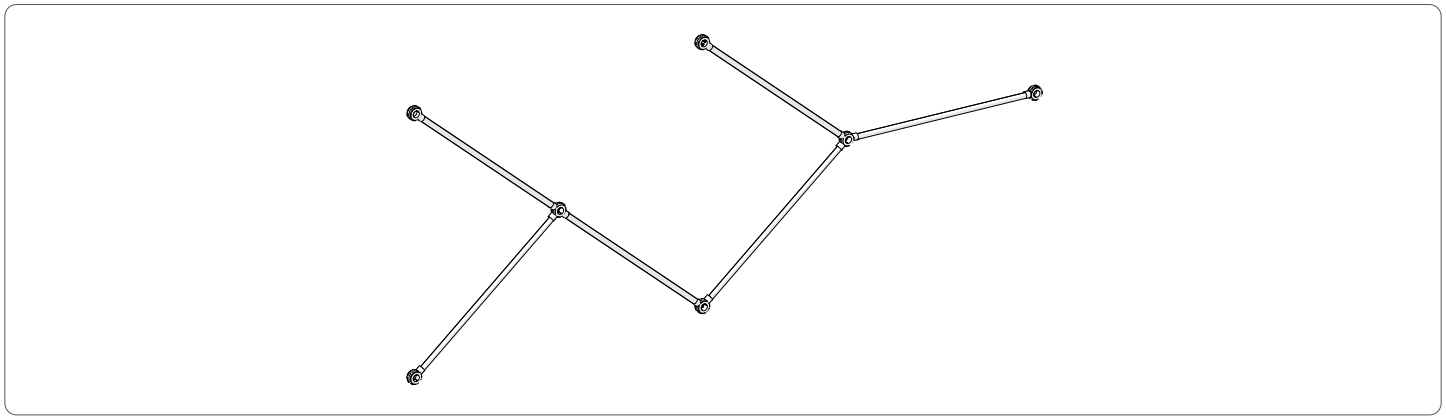

CLEANING:

- Clean with a dry or slightly damp cloth.
- Do not use abrasive cleaners or aggressive chemicals.

DISPOSAL

- Do not dispose of with household waste.
- Return to a collection point for electrical and electronic equipment.

COMPLIANCE

- The product meets the requirements of EU directives: PN-EN 60598-1

*** DISASSEMBLY OF THE LUMINAIRE**

Perform disassembly in the reverse order of assembly. Carry out all activities with the power disconnected.

ATTENTION !

Before starting disassembly, absolutely disconnect the 24V DC power supply. When removing the luminaire, secure the structure against falling.

- Turn off the power and make sure there is no voltage in the installation.
- Remove the safety elements from the fixing points of the luminaire.
- Unscrew the screws fixing the luminaire to the surface.
- Carefully remove the luminaire from the mounting points.
- Disconnect the cables powering the luminaire.
- Secure the installation cables in accordance with applicable regulations.
- If required, remove any remaining mounting elements from the surface.

After completing the disassembly, secure the installation cables in accordance with applicable regulations.

KLUŚ Sp. z o.o. ul. Słoneczna 126,
05-506 Kolonia Lesznowola
www.KlusDesign.eu