FOLED-BOK Extrusion

Ref. A08334V1

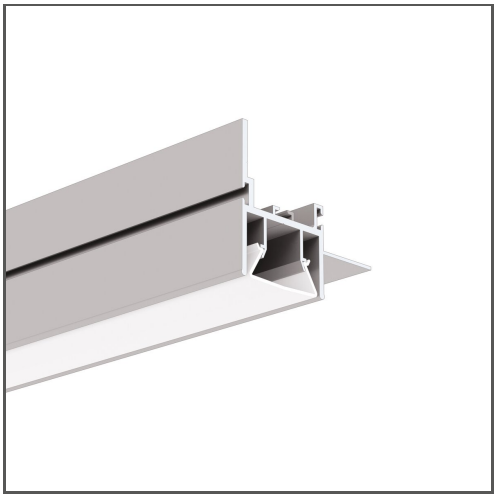

KEY FEATURES

- Installation of lighting and stretch films to walls
- Mounting to 12,5 mm - 0.50" drywall
- Non visible aluminum elements
- Line of light flush with the surface

APPLICATION

lighting recessed in surfaces made of stretch film and in drywall

MOUNTING

to the surface, using properly selected screws

ADDITIONAL INFORMATION

- the extrusion has grooves for the attachment of the hooks from the stretch film
- when choosing a different length of profiles / covers than available in the standard, you should additionally choose the cutting service at KLUŚ

IP PROTECTION RATING

IP20

MOUNTING METHOD

Recessed

TECHNICAL DRAWING

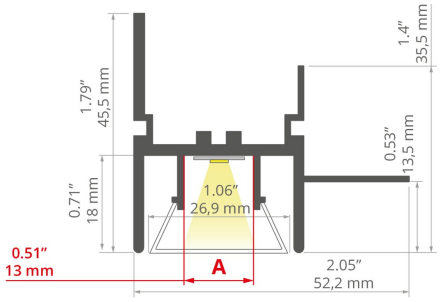

TECHNICAL SPECIFICATIONS

Material	aluminum
Color	silver non anodized
Possible fixture IP	20
Possible fixture shapes	linear, polygonal
Profile cross-section	rectangular
Length	118.5"
Width	2.1"
Height	1.8"
LED gluing width A	0.5"
Max. number of LED strips A (0.31" wide)	1
Width of the glow	26.9 mm
Max power of a single KLUŚ LED strip	7.3 W/ft
Building type	Commercial, Retail, Entertainment/ Arts, Hotel / Restaurant
Facility zone	office, decorative
The cover is cut to the length of the profile	yes
Wire out back of extrusion	yes

RELATED ACCESSORIES > COVERS

NAME	KEY FEATURES	MATERIAL	MATERIAL TRANSMITTANCE	COLOR	REF.
			24 %	black	B17045B
FOLED-27 Cover	- indoor use - for stretch ceilings	PMMA	74 %	satin	B17045S

RELATED ACCESSORIES > END CAPS

NAME	MATERIAL	COLOR	REF.
		black	C28013C07
FOLED-W End cap	PMMA	white	C24277C10

RELATED ACCESSORIES > OTHER ACCESSORIES > CONNECTORS

NAME	KEY FEATURES	MATERIAL	COLOR	REF.
ZM Connector		stainless steel	silver	42720 42728 C28070N00 C28071N00 C28072N00 C28073N00 C28074N00 C28075N00 C28243N00

FOLED-BOK Extrusion
Ref. A08334V1

NAME	KEY FEATURES	MATERIAL	COLOR	REF.
Connector ZM-G		stainless steel	silver	42304 42308 42310 42324 42326 42328 42330 42332 42334 42336 42338
ZM-NA Connector		stainless steel	silver	42339
ZM-NA-PION Connector		stainless steel	silver	42315 42317 42321
ZM-PION Connector	- for connecting profiles in the vertical plane	stainless steel	silver	42314 42316 42320 42718 42719 C28084N00 C28085N00 C28086N00 C28087N00 C28088N00

RELATED ACCESSORIES > RELATED LED > HIGH EFFICACY

NAME	KEY FEATURES	IP PROTECTION RATING	POWER CONSUMPTION	REF.
K-HEHD-0320-24 LED tape	- CRI over 95 - High Efficacy	20	1 W/ft	K-HEHD27-0320-24 K-HEHD30-0320-24 K-HEHD35-0320-24 K-HEHD40-0320-24
K-HEHD-0480-24 LED tape	- CRI over 95 - High Efficacy	20	1.5 W/ft	K-HEHD22-0480-24 K-HEHD25-0480-24 K-HEHD27-0480-24 K-HEHD30-0480-24 K-HEHD35-0480-24 K-HEHD40-0480-24 K-HEHD50-0480-24
K-HEHD-0960-24 LED tape	- CRI over 95 - High Efficacy	20	2.9 W/ft	K-HEHD22-0960-24 K-HEHD25-0960-24 K-HEHD27-0960-24 K-HEHD30-0960-24 K-HEHD35-0960-24 K-HEHD40-0960-24 K-HEHD50-0960-24
K-HEHD-1440-24 LED tape	- CRI over 95 - High Efficacy	20	4.4 W/ft	K-HEHD22-1440-24 K-HEHD25-1440-24 K-HEHD27-1440-24 K-HEHD30-1440-24 K-HEHD35-1440-24 K-HEHD40-1440-24 K-HEHD50-1440-24
LED tape K-HEHD-1920-24	- CRI over 95 - High Efficacy	20	5.9 W/ft	K-HEHD22-1920-24 K-HEHD25-1920-24 K-HEHD27-1920-24 K-HEHD30-1920-24 K-HEHD35-1920-24 K-HEHD40-1920-24 K-HEHD50-1920-24

RELATED ACCESSORIES > RELATED LED > CRI 95+

NAME	KEY FEATURES	IP PROTECTION RATING	POWER CONSUMPTION	REF.
K-CR-1210-24 LED tape	- CRI over 95	20	1.5 W/ft	K-CR22-1210-24 K-CR27-1210-24
K-CRHD-1910-24 LED tape	- CRI over 95 - high LED density	20	2.8 W/ft	K-CRHD27-1910-24 K-CRHD35-1910-24 K-CRHD40-1910-24
K-CR-1220-24 LED tape	- CRI over 95	20	2.9 W/ft	K-CR22-1220-24 K-CR25-1220-24 K-CR27-1220-24 K-CR30-1220-24 K-CR35-1220-24 K-CR40-1220-24 K-CR50-1220-24
K-CR-1275-24 LED tape	- CRI over 95	20	4.4 W/ft	K-CR22-1275-24 K-CR25-1275-24 K-CR27-1275-24 K-CR30-1275-24 K-CR35-1275-24 K-CR40-1275-24 K-CR50-1275-24
K-CRHD-1820-24 LED tape	- CRI over 95 - high LED density	20	5.6 W/ft	K-CRHD27-1820-24

FOLED-BOK Extrusion
Ref. A08334V1

RELATED ACCESSORIES > RELATED LED > CRI 90+

NAME	KEY FEATURES	IP PROTECTION RATING	POWER CONSUMPTION	REF.
K-2400-24 LED tape	- high power	20	7.3 W/ft	K-27-2400-24 K-30-2400-24 K-35-2400-24 K-40-2400-24 K-50-2400-24

RELATED ACCESSORIES > RELATED LED > ADJUSTABLE WHITE / DIM TO WARM

NAME	KEY FEATURES	IP PROTECTION RATING	POWER CONSUMPTION	REF.
K-SDCR-22T50-1530-24 LED tape	- Tuneable white 2200K-5000K	20	4.7 W/ft	K-SDCR-22T50-1530-24
KWP-SDCR-22T50-1530-24 LED tape	- Tuneable white 2200K-5000K	65	4.7 W/ft	KWP-SDCR-22T50-1530-24

RELATED ACCESSORIES > ELECTRONICS > SWITCHES

NAME	KEY FEATURES	IP PROTECTION RATING	REF.
Proximity switch UNI	- touchless switch - width only 7mm	20	E61579