DES Extrusion
Ref. A18030

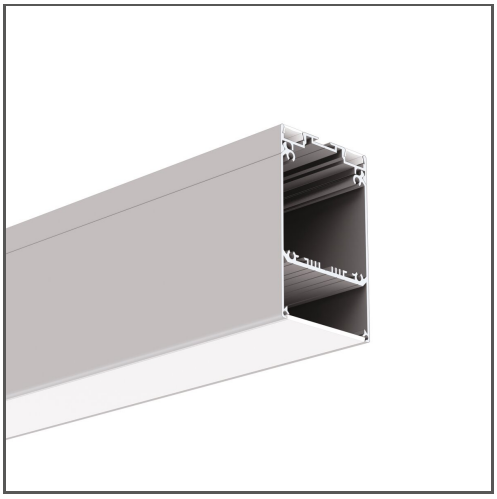

KEY FEATURES

- Up/down lighting
- Easy maintenance
- Wide range of accessories
- Possiblity to obtain UGR < 19

APPLICATION

main and decorative lighting

MOUNTING

suspended, using a dedicated mounting track and dedicated accessories

ADDITIONAL INFORMATION

- when choosing a different length of profiles / covers than available in the standard, you should additionally choose the cutting service at KLUŚ
- NCS Premium paint option - minimum order quantity 30pcs - available on order within 14 days

IP PROTECTION RATING

IP20 | IP54

MOUNTING METHOD

Suspended

TECHNICAL DRAWING

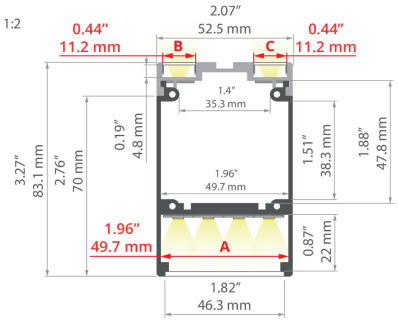

AVAILABLE COLOURS

LENGTH	REF
39.4"	A18030A_1
78.9"	A18030A_2

TECHNICAL SPECIFICATIONS

Material	aluminum
Color	silver anodized
Possible fixture IP	20, 54
Possible fixture shapes	linear, polygonal
Profile cross-section	rectangular
Width	2.1"
Height	3.3"
LED gluing width A	2"
LED gluing width B	0.4"
LED gluing width C	0.4"
Max. number of LED strips A (0.31" wide)	6
Max. number of LED strips B (0.31" wide)	1
Max. number of LED strips C (0.31" wide)	1
Width of the glow	46.55 mm
Max power of a single KLUŚ LED strip	7.3 W/ft
Dedicated space for power supply	yes
Building type	Commercial, Retail, Entertainment/ Arts, Hotel / Restaurant
Facility zone	office
The cover is cut to the length of the profile	yes
Can be easily connected into runs	yes
Wire out back of extrusion	yes
Two directional lighting for suspended fixtures	yes

RELATED ACCESSORIES > COVERS

NAME	KEY FEATURES	MATERIAL	MATERIAL TRANSMITTANCE	COLOR	REF.
KA-11 Cover	- maximum brightness - indoor use - basic - universal	PC	67 %	frosted	B17064F
			89 %	clear	B17064C
DHS Cover		PC	68 %	frosted	B17052M
			94 %	clear	B17052T
HS-11 Cover	- For indoor and outdoor applications - UV resistant - hight durability	PC	59 %	frosted	B17208F
			88 %	clear	B17208C

DES Extrusion
Ref. A18030

NAME	KEY FEATURES	MATERIAL	MATERIAL TRANSMITTANCE	COLOR	REF.
HSP-47 Cover 		PMMA	82 %	microprism	B17059P

RELATED ACCESSORIES > END CAPS

NAME	MATERIAL	COLOR	REF.
DESIN End cap 	PP	black	C24151C07
		silver	C24151L01
DES End cap 	stainless steel	silver	C28209A01
End cap set DES-HQ 	aluminum	gray	C28218AS

RELATED ACCESSORIES > OTHER ACCESSORIES > CANOPIES

NAME	KEY FEATURES	MATERIAL	COLOR	REF.
Fi-60mm Canopy	- Convenient cable length adjustment, in the ZM system	steel	gray lacquered	C24540L01
			white lacquered	C24540L10
			black lacquered	C24540L07

RELATED ACCESSORIES > OTHER ACCESSORIES > FASTENERS AND HEADS FOR EXTRUSIONS

NAME	MATERIAL	COLOR	REF.
BZP Head	stainless steel	silver	C28113N00

RELATED ACCESSORIES > OTHER ACCESSORIES > CONDUCTIVE FASTENERS AND HEADS FOR EXTRUSIONS

NAME	MATERIAL	COLOR	REF.
BZP-ZZ Head	stainless steel	gray	42215
PUSZ-PRET-ZD Fastener , silver	stainless steel	silver	42251
PUSZ-PRET-ZD Fastener	stainless steel, brass, nylon	silver	C28167N00
	aluminum, brass, nylon	white lacquered	C28167L10
	aluminum, brass, nylon	black lacquered	C28167L07

RELATED ACCESSORIES > OTHER ACCESSORIES > CONNECTORS

NAME	MATERIAL	COLOR	REF.
ZM-NA Connector	stainless steel	silver	42339
ZM-NA-PION Connector	stainless steel	silver	42315 42317 42321
ZD Connector	stainless steel	silver	43501 43502 43503
ZD-PION Connector	stainless steel	silver	C28244N00 C28245N00

RELATED ACCESSORIES > OTHER ACCESSORIES > SUSPENSION AND MOUNTING SETS

NAME	KEY FEATURES	MATERIAL	COLOR	REF.
M15 Fastener set		stainless steel	silver	42614
RG-1 Fastener set	- Cable adjustment at the ceiling, cable included	brass	silver glossy	C28230P00
			black colored	C28230L07
Fastener set PUSZ-ZD-1		aluminum	black lacquered	C24775L07
		aluminum	white lacquered	C24775L10
		stainless steel	colorless colored	C24775N00
Fastener set PUSZ-ZD-2		aluminum	black lacquered	C24776L07
		aluminum	white lacquered	C24776L10
		stainless steel	colorless colored	C24776N00

DES Extrusion
Ref. A18030

RELATED ACCESSORIES > OTHER ACCESSORIES > SECURITY AND BLOCKS

NAME	KEY FEATURES	MATERIAL	COLOR	REF.
Block ZD, gray	- Accessory locking in the ZD system	stainless steel	gray	C28195N00
Block ZM, gray	- Accessory locking in the ZM system	silicon	gray	C28194N00

RELATED ACCESSORIES > RELATED LED > HIGH EFFICACY

NAME	KEY FEATURES	IP PROTECTION RATING	POWER CONSUMPTION	REF.
K-HEHD-0320-24 LED tape	- CRI over 95 - High Efficacy	20	1 W/ft	K-HEHD27-0320-24 K-HEHD30-0320-24 K-HEHD35-0320-24 K-HEHD40-0320-24
K-HEHD-0480-24 LED tape	- CRI over 95 - High Efficacy	20	1.5 W/ft	K-HEHD22-0480-24 K-HEHD25-0480-24 K-HEHD27-0480-24 K-HEHD30-0480-24 K-HEHD35-0480-24 K-HEHD40-0480-24 K-HEHD50-0480-24
K-HEHD-0960-24 LED tape	- CRI over 95 - High Efficacy	20	2.9 W/ft	K-HEHD22-0960-24 K-HEHD25-0960-24 K-HEHD27-0960-24 K-HEHD30-0960-24 K-HEHD35-0960-24 K-HEHD40-0960-24 K-HEHD50-0960-24
K-HEHD-1440-24 LED tape	- CRI over 95 - High Efficacy	20	4.4 W/ft	K-HEHD22-1440-24 K-HEHD25-1440-24 K-HEHD27-1440-24 K-HEHD30-1440-24 K-HEHD35-1440-24 K-HEHD40-1440-24 K-HEHD50-1440-24
LED tape K-HEHD-1920-24	- CRI over 95 - High Efficacy	20	5.9 W/ft	K-HEHD22-1920-24 K-HEHD25-1920-24 K-HEHD27-1920-24 K-HEHD30-1920-24 K-HEHD35-1920-24 K-HEHD40-1920-24 K-HEHD50-1920-24

RELATED ACCESSORIES > RELATED LED > CRI 95+

NAME	KEY FEATURES	IP PROTECTION RATING	POWER CONSUMPTION	REF.
K-CR-1210-24 LED tape	- CRI over 95	20	1.5 W/ft	K-CR22-1210-24 K-CR27-1210-24
K-CRHD-1910-24 LED tape	- CRI over 95 - high LED density	20	2.8 W/ft	K-CRHD27-1910-24 K-CRHD35-1910-24 K-CRHD40-1910-24
K-CR-1220-24 LED tape	- CRI over 95	20	2.9 W/ft	K-CR22-1220-24 K-CR25-1220-24 K-CR27-1220-24 K-CR30-1220-24 K-CR35-1220-24 K-CR40-1220-24 K-CR50-1220-24
K-CR-1275-24 LED tape	- CRI over 95	20	4.4 W/ft	K-CR22-1275-24 K-CR25-1275-24 K-CR27-1275-24 K-CR30-1275-24 K-CR35-1275-24 K-CR40-1275-24 K-CR50-1275-24
K-HEHD-1440-24-40C LED tape	- High Efficacy - cold weather -40F	20	4.4 W/ft	K-HEHD22-1440-24-40C K-HEHD25-1440-24-40C K-HEHD27-1440-24-40C K-HEHD30-1440-24-40C K-HEHD35-1440-24-40C K-HEHD40-1440-24-40C K-HEHD50-1440-24-40C
K-CRHD-1820-24 LED tape	- CRI over 95 - high LED density	20	5.6 W/ft	K-CRHD27-1820-24
KWP-CR-1220-24 LED tape	- CRI over 95	65	2.9 W/ft	KWP-CR22-1220-24 KWP-CR25-1220-24 KWP-CR27-1220-24 KWP-CR30-1220-24 KWP-CR35-1220-24 KWP-CR40-1220-24 KWP-CR50-1220-24
KWP-CR-1275-24 LED tape	- CRI over 95	65	4.4 W/ft	KWP-CR22-1275-24 KWP-CR25-1275-24 KWP-CR27-1275-24 KWP-CR30-1275-24 KWP-CR35-1275-24 KWP-CR40-1275-24 KWP-CR50-1275-24

DES Extrusion
Ref. A18030

NAME	KEY FEATURES	IP PROTECTION RATING	POWER CONSUMPTION	REF.
KWP-HEHD-1440-24-40C LED tape	- High Efficacy - cold weather -40F	65	4.4 W/ft	KWP-HEHD22-1440-24-40C KWP-HEHD25-1440-24-40C KWP-HEHD27-1440-24-40C KWP-HEHD30-1440-24-40C KWP-HEHD35-1440-24-40C KWP-HEHD40-1440-24-40C KWP-HEHD50-1440-24-40C

RELATED ACCESSORIES > RELATED LED > CRI 90+

NAME	KEY FEATURES	IP PROTECTION RATING	POWER CONSUMPTION	REF.
K-2400-24 LED tape	- high power	20	7.3 W/ft	K-27-2400-24 K-30-2400-24 K-35-2400-24 K-40-2400-24 K-50-2400-24
KWP-GHD-1910-24 LED tape	- high LED density	65	2.8 W/ft	KWP-GHD27-1910-24 KWP-GHD30-1910-24 KWP-GHD35-1910-24 KWP-GHD40-1910-24
KWP-GHD-1640-24 LED tape	- high LED density	65	5 W/ft	KWP-GHD22-1640-24 KWP-GHD25-1640-24 KWP-GHD27-1640-24 KWP-GHD30-1640-24 KWP-GHD35-1640-24 KWP-GHD40-1640-24 KWP-GHD50-1640-24

RELATED ACCESSORIES > RELATED LED > ADJUSTABLE WHITE / DIM TO WARM

NAME	KEY FEATURES	IP PROTECTION RATING	POWER CONSUMPTION	REF.
K-30/18-1770-010V-24V LED tape		20	3.5 W/ft	K-30/18-1770-010V-24V
K-30/18-1770-24V LED tape		20	3.5 W/ft	K-30/18-1770-24
K-SDCR-22T50-1530-24 LED tape	- Tuneable white 2200K-5000K	20	4.7 W/ft	K-SDCR-22T50-1530-24
KWP-30/18-1770-010-24 LED tape		65	3.5 W/ft	KWP-30/18-1770-010-24
KWP-30/18-1770-24 LED tape		65	3.5 W/ft	KWP-30/18-1770-24
LED tape KWP-G30/18-1770-010-24		65	3.5 W/ft	KWP-G30/18-1770-010-24
KWP-SDCR-22T50-1530-24 LED tape	- Tuneable white 2200K-5000K	65	4.7 W/ft	KWP-SDCR-22T50-1530-24
KWP-G22/50-1728-24 LED tape	- Tuneable white 2200K-5000K	65	5.3 W/ft	KWP-G22/50-1728-24

RELATED ACCESSORIES > ELECTRONICS > SWITCHES

NAME	KEY FEATURES	IP PROTECTION RATING	REF.
Proximity switch UNI	- touchless switch - width only 7mm	20	E61579