GLADES Extrusion
Ref. A18036

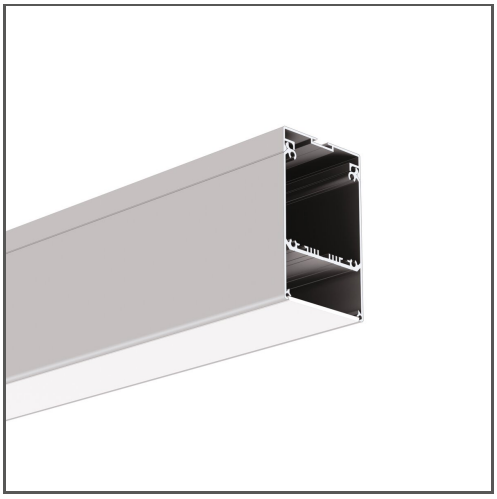

KEY FEATURES

- Smooth extrusion back
- Designed for IP54 protection rating
- Easy maintenance
- Wide range of accessories
- Possibility to use current modules with efficiency up to 190lm/W and CRI>90. Available upon request.
- Possiblity to obtain UGR < 19

APPLICATION

main and decorative lighting

MOUNTING

suspended or to the surface, using a dedicated mounting track, dedicated accessories or properly selected screws

ADDITIONAL INFORMATION

- when choosing a different length of profiles / covers than available in the standard, you should additionally choose the cutting service at KLUŚ
- NCS Premium paint option - minimum order quantity 30pcs - available on order within 14 days

IP PROTECTION RATING

IP20 IP54

MOUNTING METHOD

Suspended

Surface mounted

TECHNICAL DRAWING

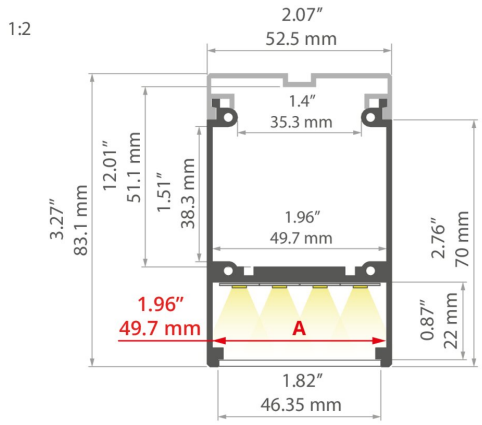

RELATED ACCESSORIES > COVERS

NAME	MATERIAL	MATERIAL TRANSMITTANCE	COLOR	REF.
		68 %	frosted	B17052M
DHS Cover	PC	94 %	clear	B17052T
HSP-47 Cover	PMMA	82 %	microprism	B17059P

RELATED ACCESSORIES > END CAPS

NAME	MATERIAL	COLOR	REF.
		black	C24151C07
DESIN End cap	PP	silver	C24151L01
DES End cap	stainless steel	silver	C28209A01
End cap set DES-HQ	aluminum	gray	C28218AS

GLADES Extrusion
Ref. A18036

RELATED ACCESSORIES > OTHER ACCESSORIES > CANOPIES

NAME	KEY FEATURES	MATERIAL	COLOR	REF.
Fi-60mm Canopy	- Convenient cable length adjustment, in the ZM system	steel	gray lacquered white lacquered black lacquered	C24540L01 C24540L10 C24540L07

RELATED ACCESSORIES > OTHER ACCESSORIES > FASTENERS AND HEADS FOR EXTRUSIONS

NAME	MATERIAL	COLOR	REF.
BZP Head	stainless steel	silver	C28113N00

RELATED ACCESSORIES > OTHER ACCESSORIES > CONDUCTIVE FASTENERS AND HEADS FOR EXTRUSIONS

NAME	MATERIAL	COLOR	REF.
BZP-ZZ Head	stainless steel	gray	42215
PUSZ-PRET-ZD Fastener , silver	stainless steel	silver	42251
PUSZ-PRET-ZD Fastener	stainless steel, brass, nylon aluminum, brass, nylon aluminum, brass, nylon	silver white lacquered black lacquered	C28167N00 C28167L10 C28167L07

RELATED ACCESSORIES > OTHER ACCESSORIES > CONNECTORS

NAME	MATERIAL	COLOR	REF.
ZM-NA Connector	stainless steel	silver	42339
ZM-NA-PION Connector	stainless steel	silver	42315 42317 42321

RELATED ACCESSORIES > OTHER ACCESSORIES > SUSPENSION AND MOUNTING SETS

NAME	KEY FEATURES	MATERIAL	COLOR	REF.
M15 Fastener set		stainless steel	silver	42614
RG-1 Fastener set	- Cable adjustment at the ceiling, cable included	brass	silver glossy black colored	C28230P00 C28230L07
Fastener set PUSZ-ZD-1		aluminum aluminum stainless steel	black lacquered white lacquered colorless colored	C24775L07 C24775L10 C24775N00
Fastener set PUSZ-ZD-2		aluminum aluminum stainless steel	black lacquered white lacquered colorless colored	C24776L07 C24776L10 C24776N00

RELATED ACCESSORIES > OTHER ACCESSORIES > SECURITY AND BLOCKS

NAME	KEY FEATURES	MATERIAL	COLOR	REF.
Block ZD, gray	- Accessory locking in the ZD system	stainless steel	gray	C28195N00
Block ZM, gray	- Accessory locking in the ZM system	silicon	gray	C28194N00

RELATED ACCESSORIES > RELATED LED > HIGH EFFICACY

NAME	KEY FEATURES	IP PROTECTION RATING	POWER CONSUMPTION	REF.
K-HEHD-0320-24 LED tape	- CRI over 95 - High Efficacy	20	1 W/ft	K-HEHD27-0320-24 K-HEHD30-0320-24 K-HEHD35-0320-24 K-HEHD40-0320-24
K-HEHD-0480-24 LED tape	- CRI over 95 - High Efficacy	20	1.5 W/ft	K-HEHD22-0480-24 K-HEHD25-0480-24 K-HEHD27-0480-24 K-HEHD30-0480-24 K-HEHD35-0480-24 K-HEHD40-0480-24 K-HEHD50-0480-24
K-HEHD-0960-24 LED tape	- CRI over 95 - High Efficacy	20	2.9 W/ft	K-HEHD22-0960-24 K-HEHD25-0960-24 K-HEHD27-0960-24 K-HEHD30-0960-24 K-HEHD35-0960-24 K-HEHD40-0960-24 K-HEHD50-0960-24
K-HEHD-1440-24 LED tape	- CRI over 95 - High Efficacy	20	4.4 W/ft	K-HEHD22-1440-24 K-HEHD25-1440-24 K-HEHD27-1440-24 K-HEHD30-1440-24 K-HEHD35-1440-24 K-HEHD40-1440-24 K-HEHD50-1440-24
LED tape K-HEHD-1920-24	- CRI over 95 - High Efficacy	20	5.9 W/ft	K-HEHD22-1920-24 K-HEHD25-1920-24 K-HEHD27-1920-24 K-HEHD30-1920-24 K-HEHD35-1920-24 K-HEHD40-1920-24 K-HEHD50-1920-24

GLADES Extrusion
Ref. A18036

RELATED ACCESSORIES > RELATED LED > CRI 95+

NAME	KEY FEATURES	IP PROTECTION RATING	POWER CONSUMPTION	REF.
K-CR-1210-24 LED tape	- CRI over 95	20	1.5 W/ft	K-CR22-1210-24 K-CR27-1210-24
K-CRHD-1910-24 LED tape	- CRI over 95 - high LED density	20	2.8 W/ft	K-CRHD27-1910-24 K-CRHD35-1910-24 K-CRHD40-1910-24
K-CR-1220-24 LED tape	- CRI over 95	20	2.9 W/ft	K-CR22-1220-24 K-CR25-1220-24 K-CR27-1220-24 K-CR30-1220-24 K-CR35-1220-24 K-CR40-1220-24 K-CR50-1220-24
K-CR-1275-24 LED tape	- CRI over 95	20	4.4 W/ft	K-CR22-1275-24 K-CR25-1275-24 K-CR27-1275-24 K-CR30-1275-24 K-CR35-1275-24 K-CR40-1275-24 K-CR50-1275-24
K-HEHD-1440-24-40C LED tape	- High Efficacy - cold weather -40F	20	4.4 W/ft	K-HEHD22-1440-24-40C K-HEHD25-1440-24-40C K-HEHD27-1440-24-40C K-HEHD30-1440-24-40C K-HEHD35-1440-24-40C K-HEHD40-1440-24-40C K-HEHD50-1440-24-40C
K-CRHD-1820-24 LED tape	- CRI over 95 - high LED density	20	5.6 W/ft	K-CRHD27-1820-24
KWP-CR-1220-24 LED tape	- CRI over 95	65	2.9 W/ft	KWP-CR22-1220-24 KWP-CR25-1220-24 KWP-CR27-1220-24 KWP-CR30-1220-24 KWP-CR35-1220-24 KWP-CR40-1220-24 KWP-CR50-1220-24
KWP-CR-1275-24 LED tape	- CRI over 95	65	4.4 W/ft	KWP-CR22-1275-24 KWP-CR25-1275-24 KWP-CR27-1275-24 KWP-CR30-1275-24 KWP-CR35-1275-24 KWP-CR40-1275-24 KWP-CR50-1275-24

RELATED ACCESSORIES > RELATED LED > CRI 90+

NAME	KEY FEATURES	IP PROTECTION RATING	POWER CONSUMPTION	REF.
K-2400-24 LED tape	- high power	20	7.3 W/ft	K-27-2400-24 K-30-2400-24 K-35-2400-24 K-40-2400-24 K-50-2400-24
KWP-GHD-1910-24 LED tape	- high LED density	65	2.8 W/ft	KWP-GHD27-1910-24 KWP-GHD30-1910-24 KWP-GHD35-1910-24 KWP-GHD40-1910-24
KWP-GHD-1640-24 LED tape	- high LED density	65	5 W/ft	KWP-GHD22-1640-24 KWP-GHD25-1640-24 KWP-GHD27-1640-24 KWP-GHD30-1640-24 KWP-GHD35-1640-24 KWP-GHD40-1640-24 KWP-GHD50-1640-24

RELATED ACCESSORIES > ELECTRONICS > SWITCHES

NAME	KEY FEATURES	IP PROTECTION RATING	REF.
Proximity switch UNI	- touchless switch - width only 7mm	20	E61579