STEPUS Extrusion
Ref. A18038

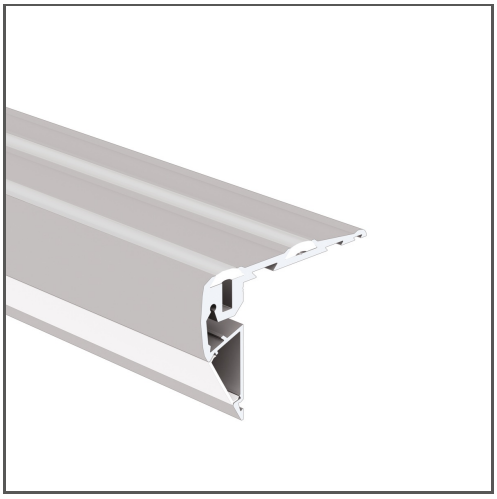

KEY FEATURES

- For installation on the steps
- Conforms to the American ADA norms
- Non-slip elements
- Two lighting options
- High mechanical resistance

APPLICATION

warning lighting and anti-slip protection on the steps

MOUNTING

to a step, using properly selected screws

ADDITIONAL INFORMATION

- when choosing a different length of profiles / covers than available in the standard, you should additionally choose the cutting service at KLUŚ

IP PROTECTION RATING

IP20 | IP67

MOUNTING METHOD

Surface mounted

TECHNICAL DRAWING

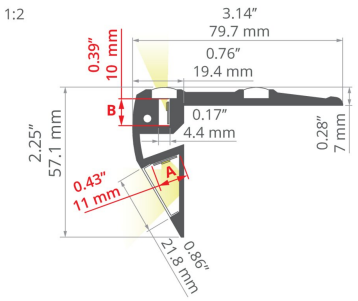

AVAILABLE COLOURS

COLOR	LENGTH	REF
silver anodized	39.4"	A18038A_1
	78.9"	A18038A_2
black anodized		A18038A07_2
	118.5"	A18038A07_3

TECHNICAL SPECIFICATIONS

Material	aluminum
Possible fixture IP	20, 67
Possible fixture shapes	linear
Width	3.1"
Height	2.2"
LED gluing width A	0.4"
LED gluing width B	0.4"
Max. number of LED strips A (0.31" wide)	1
Width of the glow	22 mm
Max power of a single KLUŚ LED strip	7.3 W/ft
Building type	Commercial, Entertainment/ Arts, Hotel / Restaurant
Facility zone	stairs / hallways
The cover is cut to the length of the profile	yes
Wire out back of extrusion	yes

RELATED ACCESSORIES > COVERS

NAME	KEY FEATURES	MATERIAL	MATERIAL TRANSMITTANCE	COLOR	REF.
HS-22 Cover	- For indoor and outdoor applications - UV resistant	PC	65 %	frosted	B17011F
			88 %	clear	B17011C
			90.5 %	microprism	B17011M
LIGER-22 Cover	- hight light quality - For indoor and outdoor applications - Ease of obtaining a line of light - perfectly diffusing	PC	22 %	black	B17032B
			70 %	satin	B17032S

RELATED ACCESSORIES > END CAPS

NAME	MATERIAL	COLOR	REF.
STEPUS-L End cap	PP	black	C28011C07
		gray	C28011C02
STEPUS-P End cap	PP	black	C28012C07
		gray	C28012C02

STEPUS Extrusion
Ref. A18038

RELATED ACCESSORIES > RELATED LED > HIGH EFFICACY

NAME	KEY FEATURES	IP PROTECTION RATING	POWER CONSUMPTION	REF.
K-HEHD-0320-24 LED tape	- CRI over 95 - High Efficacy	20	1 W/ft	K-HEHD27-0320-24 K-HEHD30-0320-24 K-HEHD35-0320-24 K-HEHD40-0320-24
K-HEHD-0480-24 LED tape	- CRI over 95 - High Efficacy	20	1.5 W/ft	K-HEHD22-0480-24 K-HEHD25-0480-24 K-HEHD27-0480-24 K-HEHD30-0480-24 K-HEHD35-0480-24 K-HEHD40-0480-24 K-HEHD50-0480-24
K-HEHD-0960-24 LED tape	- CRI over 95 - High Efficacy	20	2.9 W/ft	K-HEHD22-0960-24 K-HEHD25-0960-24 K-HEHD27-0960-24 K-HEHD30-0960-24 K-HEHD35-0960-24 K-HEHD40-0960-24 K-HEHD50-0960-24
K-HEHD-1440-24 LED tape	- CRI over 95 - High Efficacy	20	4.4 W/ft	K-HEHD22-1440-24 K-HEHD25-1440-24 K-HEHD27-1440-24 K-HEHD30-1440-24 K-HEHD35-1440-24 K-HEHD40-1440-24 K-HEHD50-1440-24
LED tape K-HEHD-1920-24	- CRI over 95 - High Efficacy	20	5.9 W/ft	K-HEHD22-1920-24 K-HEHD25-1920-24 K-HEHD27-1920-24 K-HEHD30-1920-24 K-HEHD35-1920-24 K-HEHD40-1920-24 K-HEHD50-1920-24

RELATED ACCESSORIES > RELATED LED > CRI 95+

NAME	KEY FEATURES	IP PROTECTION RATING	POWER CONSUMPTION	REF.
K-HEHD-1440-24-40C LED tape	- High Efficacy - cold weather -40F	20	4.4 W/ft	K-HEHD22-1440-24-40C K-HEHD25-1440-24-40C K-HEHD27-1440-24-40C K-HEHD30-1440-24-40C K-HEHD35-1440-24-40C K-HEHD40-1440-24-40C K-HEHD50-1440-24-40C

RELATED ACCESSORIES > RELATED LED > CRI 90+

NAME	KEY FEATURES	IP PROTECTION RATING	POWER CONSUMPTION	REF.
K-2400-24 LED tape	- high power	20	7.3 W/ft	K-27-2400-24 K-30-2400-24 K-35-2400-24 K-40-2400-24 K-50-2400-24
KWP-GHD-1910-24 LED tape	- high LED density	65	2.8 W/ft	KWP-GHD27-1910-24 KWP-GHD30-1910-24 KWP-GHD35-1910-24 KWP-GHD40-1910-24
KWP-GHD-1640-24 LED tape	- high LED density	65	5 W/ft	KWP-GHD22-1640-24 KWP-GHD25-1640-24 KWP-GHD27-1640-24 KWP-GHD30-1640-24 KWP-GHD35-1640-24 KWP-GHD40-1640-24 KWP-GHD50-1640-24

RELATED ACCESSORIES > RELATED LED > ADJUSTABLE WHITE / DIM TO WARM

NAME	IP PROTECTION RATING	POWER CONSUMPTION	REF.
K-30/18-1770-010V-24V LED tape	20	3.5 W/ft	K-30/18-1770-010V-24V
KWP-30/18-1770-010-24 LED tape	65	3.5 W/ft	KWP-30/18-1770-010-24
LED tape KWP-G30/18-1770-010-24	65	3.5 W/ft	KWP-G30/18-1770-010-24

RELATED ACCESSORIES > ELECTRONICS > SWITCHES

NAME	KEY FEATURES	IP PROTECTION RATING	REF.
Proximity switch UNI	- touchless switch - width only 7mm	20	E61579