MOD-50 Extrusion

Ref. A18047

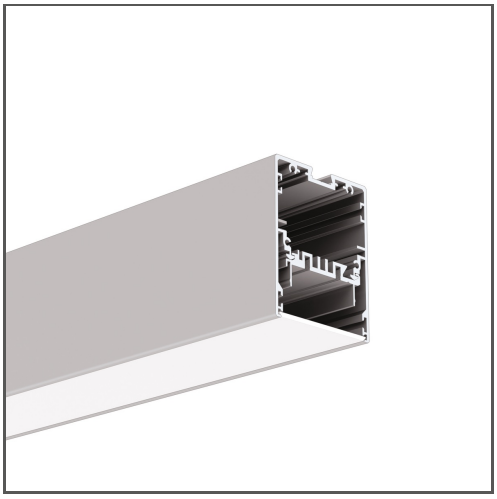

KEY FEATURES

- Installation from below, wall to wall
- Up/down lighting
- Easy maintenance
- Possibility to use current modules with efficiency up to 190lm/W and CRI>90. Available upon request.
- Possiblity to obtain UGR < 19

APPLICATION

main and decorative lighting

MOUNTING

suspended, using dedicated accessories

ADDITIONAL INFORMATION

- the luminous efficiency can be increased by 20% with the use of REFLEX 16-60 reflectors
- both LED strips and LED current modules can be used
- safety due to high vibration resistance
- when choosing a different length of profiles / covers than available in the standard, you should additionally choose the cutting service at KLUŚ
- NCS Premium paint option - minimum order quantity 30pcs - available on order within 14 days

IP PROTECTION RATING

IP20

MOUNTING METHOD

Suspended

TECHNICAL DRAWING

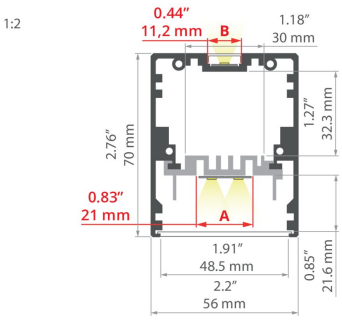

AVAILABLE COLOURS

COLOR	LENGTH	REF
silver anodized	39.4"	A18047A_1
	78.9"	A18047A_2
white lacquered	39.4"	A18047L10OD_1
	78.9"	A18047L10OD_2

TECHNICAL SPECIFICATIONS

Material	aluminum
Possible fixture IP	20
Possible fixture shapes	linear, polygonal
Profile cross-section	rectangular
Width	2.2"
Height	2.8"
LED gluing width A	0.8"
LED gluing width B	0.4"
Max. number of LED strips A (0.31" wide)	1
Width of the glow	49.45 mm
Max power of a single KLUŚ LED strip	7.3 W/ft
Dedicated space for power supply	yes
Possibility of obtaining a line of light	yes
Building type	Commercial, Retail, Entertainment/ Arts, Hotel / Restaurant
Facility zone	office, lobby / foyer
The cover is cut to the length of the profile	yes
Can be easily connected into runs	yes
Wire out back of extrusion	yes
Two directional lighting for suspended fixtures	yes

RELATED ACCESSORIES > COVERS

NAME	KEY FEATURES	MATERIAL	MATERIAL TRANSMITTANCE	COLOR	REF.
HS-11 Cover	- For indoor and outdoor applications - UV resistant - hight durability	PC	59 %	frosted	B17208F
			88 %	clear	B17208C
KA-11 Cover	- maximum brightness - indoor use - basic - universal	PC	67 %	frosted	B17064F
			89 %	clear	B17064C
LIGER-11 Cover	- hight light quality - Ease of obtaining a line of light - perfectly diffusing - For indoor and outdoor applications	PC	21 %	black	B17037B
			59 %	satin	B17037S

MOD-50 Extrusion
Ref. A18047

NAME	KEY FEATURES	MATERIAL	MATERIAL TRANSMITTANCE	COLOR	REF.
			70 %	frosted	B17058F
HSP-49 Cover	- Ease of obtaining a wide line of light - indoor use	PC	82 %	microprism	B17058M

LINE OF LIGHT TABLE

LED TAPE	HSP-49 FROSTED
K-0360-24	✓ (2)
K-0720-24	✓ (2)
K-1080-24	✓ (2)
K-HD-0430-24	✓ (2)
K-HD-0830-24	✓ (2)
K-HD-1260-24	✓ (2)
K-CR-1220-24	✓ (2)
K-CR-1275-24	✓ (2)
K-CRHD-1820-24	✓ (2)
K-CRHD-1910-24	✓ (2)
K-HEHD-0480-24	✓ (2)
K-HEHD-0960-24	✓ (2)
K-HEHD-1440-24	✓ (2)
K-HEHD-1920-24	✓ (2)
K-HEHD-0320-24	✓ (2)
K-RGBW-1920-120-24	✓ (2)
K-RGB-1200-24	✓ (2)
K-18D30-0960-24	✓ (2)
K-2400-24	✓ (2)
K-HEHD-1440-24-40C	✓ (2)
K-SD-1440-24	✓ (2)
K-RGBW-1920-160-24	✓ (2)
KWP-GRGBW-1920-120-24	✓ (2)
K-SDCR-22T50-1530-24	✓ (2)
KWP-SDCR-22T50-1530-24	✓ (2)

Description

✓ - Line of Light for a number (X) of rows - Pixel free imaging
X - Visible Dotting from Diodes
HL - Centered Line of Light - Concentrated in middle
HL (X) - Centered Line of Light for a number (X) of rows - Concentrated in middle

Line of Light Guide



Clean Line of Light (Pixel free imaging)



Centered Line of Light



Visible Dotting from Diodes

RELATED ACCESSORIES > END CAPS

NAME	MATERIAL	COLOR	REF.
MOD-50 End cap 	ABS	black	C28024C07
		gray	C28024C02
		white	C28024C10

RELATED ACCESSORIES > OTHER ACCESSORIES > CANOPIES

NAME	KEY FEATURES	MATERIAL	COLOR	REF.
Fi-60mm Canopy	- Convenient cable length adjustment, in the ZM system	steel	gray lacquered	C24540L01
			white lacquered	C24540L10
			black lacquered	C24540L07

MOD-50 Extrusion
Ref. A18047

RELATED ACCESSORIES > OTHER ACCESSORIES > FASTENERS AND HEADS FOR EXTRUSIONS

NAME	KEY FEATURES	MATERIAL	COLOR	REF.
M4-12 Fastener	- Cable length adjustment	stainless steel, brass, nylon	silver chrome white lacquered black lacquered	C28118N00 C28118C10 C28118C07

RELATED ACCESSORIES > OTHER ACCESSORIES > CONNECTORS

NAME	KEY FEATURES	MATERIAL	COLOR	REF.
ZM Connector		stainless steel	silver	42720 42728 C28070N00 C28071N00 C28072N00 C28073N00 C28074N00 C28075N00 C28243N00
Connector ZM-G		stainless steel	silver	42304 42308 42310 42324 42326 42328 42330 42332 42334 42336 42338
ZM-PION Connector	- for connecting profiles in the vertical plane	stainless steel	silver	42314 42316 42320 42718 42719 C28084N00 C28085N00 C28086N00 C28087N00 C28088N00

RELATED ACCESSORIES > OTHER ACCESSORIES > SUSPENSION AND MOUNTING SETS

NAME	KEY FEATURES	MATERIAL	COLOR	REF.
RG-1 Fastener set	- Cable adjustment at the ceiling, cable included	brass	silver glossy black colored	C28230P00 C28230L07

RELATED ACCESSORIES > RELATED LED > HIGH EFFICACY

NAME	KEY FEATURES	IP PROTECTION RATING	POWER CONSUMPTION	REF.
K-HEHD-0320-24 LED tape	- CRI over 95 - High Efficacy	20	1 W/ft	K-HEHD27-0320-24 K-HEHD30-0320-24 K-HEHD35-0320-24 K-HEHD40-0320-24
K-HEHD-0480-24 LED tape	- CRI over 95 - High Efficacy	20	1.5 W/ft	K-HEHD22-0480-24 K-HEHD25-0480-24 K-HEHD27-0480-24 K-HEHD30-0480-24 K-HEHD35-0480-24 K-HEHD40-0480-24 K-HEHD50-0480-24
K-HEHD-0960-24 LED tape	- CRI over 95 - High Efficacy	20	2.9 W/ft	K-HEHD22-0960-24 K-HEHD25-0960-24 K-HEHD27-0960-24 K-HEHD30-0960-24 K-HEHD35-0960-24 K-HEHD40-0960-24 K-HEHD50-0960-24
K-HEHD-1440-24 LED tape	- CRI over 95 - High Efficacy	20	4.4 W/ft	K-HEHD22-1440-24 K-HEHD25-1440-24 K-HEHD27-1440-24 K-HEHD30-1440-24 K-HEHD35-1440-24 K-HEHD40-1440-24 K-HEHD50-1440-24
LED tape K-HEHD-1920-24	- CRI over 95 - High Efficacy	20	5.9 W/ft	K-HEHD22-1920-24 K-HEHD25-1920-24 K-HEHD27-1920-24 K-HEHD30-1920-24 K-HEHD35-1920-24 K-HEHD40-1920-24 K-HEHD50-1920-24

MOD-50 Extrusion
Ref. A18047

RELATED ACCESSORIES > RELATED LED > CRI 95+

NAME	KEY FEATURES	IP PROTECTION RATING	POWER CONSUMPTION	REF.
K-CR-1210-24 LED tape	- CRI over 95	20	1.5 W/ft	K-CR22-1210-24 K-CR27-1210-24
K-CRHD-1910-24 LED tape	- CRI over 95 - high LED density	20	2.8 W/ft	K-CRHD27-1910-24 K-CRHD35-1910-24 K-CRHD40-1910-24
K-CR-1220-24 LED tape	- CRI over 95	20	2.9 W/ft	K-CR22-1220-24 K-CR25-1220-24 K-CR27-1220-24 K-CR30-1220-24 K-CR35-1220-24 K-CR40-1220-24 K-CR50-1220-24
K-CR-1275-24 LED tape	- CRI over 95	20	4.4 W/ft	K-CR22-1275-24 K-CR25-1275-24 K-CR27-1275-24 K-CR30-1275-24 K-CR35-1275-24 K-CR40-1275-24 K-CR50-1275-24
K-HEHD-1440-24-40C LED tape	- High Efficacy - cold weather -40F	20	4.4 W/ft	K-HEHD22-1440-24-40C K-HEHD25-1440-24-40C K-HEHD27-1440-24-40C K-HEHD30-1440-24-40C K-HEHD35-1440-24-40C K-HEHD40-1440-24-40C K-HEHD50-1440-24-40C
K-CRHD-1820-24 LED tape	- CRI over 95 - high LED density	20	5.6 W/ft	K-CRHD27-1820-24

RELATED ACCESSORIES > RELATED LED > CRI 90+

NAME	KEY FEATURES	IP PROTECTION RATING	POWER CONSUMPTION	REF.
K-2400-24 LED tape	- high power	20	7.3 W/ft	K-27-2400-24 K-30-2400-24 K-35-2400-24 K-40-2400-24 K-50-2400-24

RELATED ACCESSORIES > RELATED LED > ADJUSTABLE WHITE / DIM TO WARM

NAME	KEY FEATURES	IP PROTECTION RATING	POWER CONSUMPTION	REF.
K-30/18-1770-010V-24V LED tape		20	3.5 W/ft	K-30/18-1770-010V-24V
K-SDCR-22T50-1530-24 LED tape	- Tuneable white 2200K-5000K	20	4.7 W/ft	K-SDCR-22T50-1530-24
KWP-30/18-1770-010-24 LED tape		65	3.5 W/ft	KWP-30/18-1770-010-24
LED tape KWP-G30/18-1770-010-24		65	3.5 W/ft	KWP-G30/18-1770-010-24
KWP-SDCR-22T50-1530-24 LED tape	- Tuneable white 2200K-5000K	65	4.7 W/ft	KWP-SDCR-22T50-1530-24

RELATED ACCESSORIES > ELECTRONICS > SWITCHES

NAME	KEY FEATURES	IP PROTECTION RATING	REF.
Proximity switch UNI	- touchless switch - width only 7mm	20	E61579

KLUŚ Inspiring Solutions

Fixture build code

Ref. No.		Finish		Cover		Led color		LED output			Length		Mounting		Wire length		IP
A18047	–		–		–		–		–	24		–		–		–	

Extrusion Finish

B - black, anodized caramel (NCSS3030-Y60R), lacquered light sage (NCSS2010-G50Y), lacquered pastel blue, lacquered sand (NCSS2010-Y30R), lacquered
A - silver, anodized
W - white, lacquered

Cover Type

FC - HSP-49 frosted, 70%*
JUN - HSP-49 microprism, 82%

Single color

LED output LOW

25 - 2500 **0480/2** - 2.93W/ft, 307lm/ft
27 - 2700 **1210/2** - 2.93W/ft, 173lm/ft
35 - 3500 **0530/2** - 3.23W/ft, 273lm/ft
40 - 4000 **0320/2** - 1.94W/ft, 221lm/ft

LED output MEDIUM

40 - 4000 **1910/2** - 5.55W/ft, 544lm/ft
50 - 5000 **0480/2** - 2.93W/ft, 396lm/ft
50 - 5000 **0960/2** - 5.85W/ft, 793lm/ft

LED output HIGH

27 - 2700 **1820/2** - 11.13W/ft, 883lm/ft
50 - 5000 **1275/2** - 8.78W/ft, 928lm/ft
50 - 5000 **1440/2** - 8.78W/ft, 1333lm/ft
50 - 5000 **1920/2** - 11.71W/ft, 1568lm/ft
50 - 5000 **2400/2** - 14.63W/ft, 2195lm/ft

DIM

1770/2 - 7.01W/ft, 584lm/ft

Type

ROD78 - Rod 78"
ROD+78 - Rod (conductive) 78"
Cable36 - Cable 36"
Cable78 - Cable 78"
Cable+36 - Cable (conductive) 36"
Cable+78 - Cable (conductive) 78"
Custom length - add to notes
TBD - TBD

IP protection rating

IP20 - IP20

Mounting method

- ☐ suspended mount

Wire out

- ☐ back of extrusion
- ☐ end cap
- ☐ TBD

Length Optimization

- ☐ Yes
- ☐ No

Wire type

- ☐ FC - Female connector
- ☐ MC - Male connector
- ☐ Plenum Rated
- ☐ TBD

POWER SUPPLY Type

- ☐ DMX SYSTEM
- ☐ RF SYSTEM (Handheld remote)
- ☐ Non-dimming
- ☐ MAX5 Series (Forward/ Reverse Phase, 0-10V, PWM, Resistance)
- ☐ MLV (TRIAC / Forward Phase)
- ☐ PWM
- ☐ ULTRA Series (Forward/ Reverse Phase, 0-10V)

ULTRA

Constant Voltage LED Drivers
3-in-1 Universal Dimming

30W P/N:ULTRA-30-24V, 60W P/N:ULTRA-60-24V, 96W P/N:ULTRA-96-24V



CE FC c UL us LISTED RoHS Compliant MEETS TITLE 24/JA8 REQUIREMENTS

DIMMABLE DIM DOWN TO 1% CLASS P CLASS 2 IP66

24VDC 120 - 277V SELV TYPE HL PLENUM RATED

The ULTRA is a Constant Voltage Class 2 rated UL Listed driver. The drivers with enclosures have a built-in junction box on both the input and output. These drivers are IP66 and UL2043 plenum rated and are suitable for both indoor and outdoor installations. With universal input voltage ranging from 120 to 277VAC, the ULTRA driver is designed for residential, commercial and industrial applications. The dimmers deliver smooth flicker-free dimming down to 1% with most LEDs and compatible with a wide variety of dimmers.

Key Features

- Forward & Reverse Phase-Cut Dimming or 0-10V Dimming
- Smooth Flicker-Free Dimming, Down To 1%
- Universal Input Voltage - 120 to 277VAC
- UL Listed Enclosure With Built-In Junction Boxes
- IP66 For Both Indoor & Outdoor Use
- Class 2, Class P Hiccup Mode Protection For Short Circuit & Over-Temperature
- Overload Protection

Product Name: ULTRA
Description: Constant Voltage 3-in-1 Universal Dimming LED Driver
Installation: Can have integrated junction box with multiple 7/8" knock-outs or no junction box with wire leads
Driver Type: Class 2 Single Channel
Dimming: Phase-cut dimming down to 1% with Forward Phase (MLV/CL/LED+) and Reverse Phase (ELV) dimmers or 0-10V dimming
Input Voltage: Universal 120VAC to 277VAC, 50/60Hz
Output Voltage: 24VDC
Wattage: 30W / 60W / 96W
IP Rating: IP66
Listing: UL Listed
Certifications: UL8750, UL2043 Plenum Rated
*Min. Spacing between drivers – 5”

	Dimensions			
	With Junction Box		Without Junction Box	
Length	12.10"	(307.34mm)	7.50"	(191.6mm)
Width	2.36"	(59.94mm)	2.36"	(59.94mm)
Height	1.40"	(35.6mm)	1.40"	(35.6mm)

Ordering Guide

MODEL		POWER		OUTPUT
	-		-	
ULTRA		**30** - 30 W **60** - 60 W **96** - 96 W		**24V** - 24VDC **24V** - 24VDC **24V** - 24VDC

REV002 5/6/2026
We reserve the right to change and modify our products.
https://klusdesign.com, quotations@klusdesign.com
KLUS LLC, 3755 9th St. SW, Vero Beach, FL 32968

ULTRA

Constant Voltage LED Drivers
3-in-1 Universal Dimming

30W P/N:ULTRA-30-24V, 60W P/N:ULTRA-60-24V, 96W P/N:ULTRA-96-24V

SPECIFICATIONS			
Input	**ULTRA-30-24V**	**ULTRA-60-24V**	**ULTRA-96-24V**
Input Voltage Range	100 to 277VAC ± 10%	100 to 277VAC ± 10%	100 to 277VAC ± 10%
Input Frequency	50 / 60Hz	50 / 60Hz	50 / 60Hz
Input Current	0.98A Max	0.98A Max	0.98A Max
Inrush Current	< 40A Max @ 120VAC	< 40A Max @ 120VAC	< 40A Max @ 120VAC
Efficiency	> 86% Max	> 86% Max	> 86% Max
Power Factor	277VAC, > 0.90 120VAC, > 0.95	277VAC, > 0.90 120VAC, > 0.95	277VAC, > 0.90 120VAC, > 0.95
THD	< 20%	< 20%	< 20%
Output			
Output Voltage	24VDC	24VDC	24VDC
Max Load	30W	60W	96W
Output Current @ Max Load	1.3A	2.6A	4.1A
Output Ripple	< 10%	< 10%	< 10%
Line Regulation	± 2.5%	± 2.5%	± 2.5%
Load Regulation	± 5%	± 5%	± 5%
Turn On Delay Time	< 0.5 sec	< 0.5 sec	< 0.5 sec
Environmental			
Env. Protection Rating	**IP66**	**IP66**	**IP66**
Ambient Operating Temp.	-25°C to +40°C (-13°F to 104°F)	-25°C to +40°C (-13°F to 104°F)	-25°C to +40°C (-13°F to 104°F)
Max. Case Temp. (Tcase)	80°C (176°F)	80°C (176°F)	80°C (176°F)
Storage Temperature	-40°C to +85°C (-40°F to 185°F)	-40°C to +85°C (-40°F to 185°F)	-40°C to +85°C (-40°F to 185°F)
Expected Lifetime	≥ 50,000 hrs @Tc ≤ 75	≥ 50,000 hrs @Tc ≤ 75	≥ 50,000 hrs @Tc ≤ 75
Audible Noise	< 24 dB Class A	< 24 dB Class A	< 24 dB Class A
Dimming (Dimming Models Only)			
Dimming Style	Phase-Cut or 0-10V	Phase-Cut or 0-10V	Phase-Cut or 0-10V
Minimum Dimming Level	1%	1%	1%
Dimming Curve	Linear	Linear	Linear
Protection			
Over Current Protection	Yes	Yes	Yes
Over Voltage Protection	Yes	Yes	Yes
Over Temp. Protection	Yes / Hiccup Mode	Yes / Hiccup Mode	Yes / Hiccup Mode
Overload Protection	Yes / Current Limit	Yes / Current Limit	Yes / Current Limit
Short Circuit Protection	Yes / Current Limit	Yes / Current Limit	Yes / Current Limit

REV002 5/6/2026
We reserve the right to change and modify our products.
https://klusdesign.com, quotations@klusdesign.com
KLUS LLC, 3755 9th St. SW, Vero Beach, FL 32968

MECHANICAL DIAGRAMS

WITH Integrated Junction Box

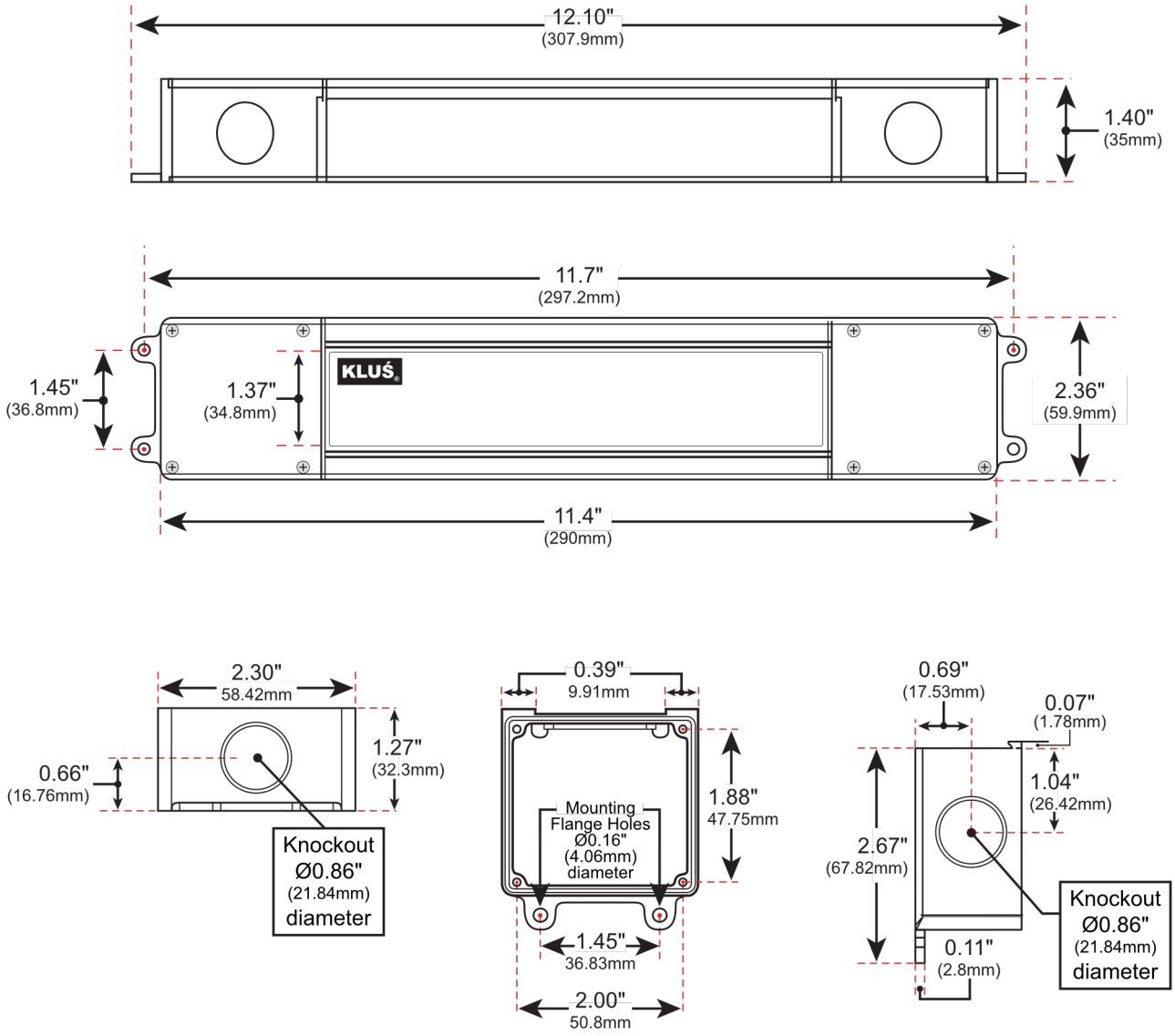

REV002 5/6/2026
We reserve the right to change and modify our products.
https://klusdesign.com, quotations@klusdesign.com
KLUS LLC, 3755 9th St. SW, Vero Beach, FL 32968

Max5 Series

96W, 1-Channel, Class 2 / 288W, 3-Channel, Class 2 / 300W, 1-Channel, Class 1 / 5-Way Universal Dimming / 24V LED Driver

96W P/N: MAX5-96-24V 288W P/N: MAX5-MLT-3-96-24V 300W P/N: MAX5-300-24V



RoHS Compliant | DIMMABLE | cULus LISTED

MEETS TITLE 24/JA8 REQUIREMENTS | SELV | 24VDC | 120 - 277VAC

Key Features

- 5-way universal dimming
- Smooth flicker-free dimming, down to 1%
- Compatible with high density LED & COB products
- Universal input voltage - 120 to 277VAC
- Constant power overload protection
- Wire connectors pre-installed
- UL rated for wet locations
- 5-year warranty

Description:	Constant Voltage Dimmable LED Driver
Installation:	Integrated junction box with multiple 7/8" knockouts
96W Driver Type:	1-Channel, Class 2
288W Driver Type:	3-Channel (96W per Channel), Class 2
300W Driver Type:	1-Channel, Class 1
Dimming:	5-way dimming: forward phase (MLV), reverse phase (ELV), 0-10V, PWM, and potentiometer
Output Dimming Method:	Uses Pulse Width Modulation (PWM) method for dimmed low voltage output
Flicker:	Meets California Title 24 / JA8
Input Voltage:	Universal 120VAC to 277VAC, 50/60Hz
Output Voltage:	24VDC
Wattage:	96W, 288W (3 x 96W), and 300W
Enclosure Rating:	NEMA 3R
Listing:	UL listed, wet location
Certifications:	UL8750, FCC Consumer Limits (Class B)
Warranty:	5-Year
Warranty:	5-Year
Warranty:	5-Year
	*Min. Spacing between drivers – 5”

Dimensions			
96W	Width	8.1"	(206mm)
	Overall Height	5.6"	(142mm)
	Height	4.3"	(110mm)
	Depth	1.7"	(43mm)
288/300W	Width	9.9"	(252mm)
	Overall Height	7.6"	(193mm)
	Height	6.4"	(163mm)
	Depth	1.9"	(48.3mm)

Ordering Guide

1-Channel	Max Power	Listing	Output	Enclosure Type
MAX5-96-24V	96W	UL Listed	24VDC	NEMA 3R
MAX5-300-24V	300W			
3-Channel	**Max Power**			
MAX5-MLT-3-96-24V	288W (96W x 3)			

REV002 5/6/2026
We reserve the right to change and modify our products.
https://klusdesign.com, quotations@klusdesign.com
KLUS LLC, 3755 9th St. SW, Vero Beach, FL 32968

Max5 Series

96W, 1-Channel, Class 2 / 288W, 3-Channel, Class 2 / 300W, 1-Channel, Class 1 / 5-Way Universal Dimming / 24V LED Driver

SPECIFICATIONS			
Input	**▼ MAX5-96-24V**	**▼ MAX5-MLT-3-96-24V**	**▼ MAX5-300-24V**
Input Voltage Range	120 to 277VAC ± 10%	120 to 277VAC ± 10%	120 to 277VAC ± 10%
Input Frequency	50 / 60Hz	50 / 60Hz	50 / 60Hz
Input Current	1.05A @ 120V, 0.45A @ 277V	3.0A @ 120V, 1.8A @ 277V	3.0A @ 120V, 1.8A @ 277V
Inrush Current	80A @ 277V	90A @ 277V	90A @ 277V
Efficiency	84% @120V, 87% @ 277V	91% @120V, 93% @ 277V	91% @120V, 93% @ 277V
Power Factor	277VAC, > 0.94 120VAC, > 0.94	277VAC, > 0.90 120VAC, > 0.90	277VAC, > 0.90 120VAC, > 0.90
THD	< 20%	< 20%	< 20%
Output			
Output Voltage	24VDC	24VDC per channel	24VDC
Maximum Load	96W	96W per channel (unloaded channels permitted)	300W
Output Current @ Maximum Load	4.1A	4.1A per channel	12.5A
Output Dimming Method	PWM	PWM	PWM
Flicker	California Title 24 / JA8	California Title 24 / JA8	California Title 24 / JA8
Output Ripple (Peak-to-Peak)	≤ 8%	< 5%	< 5%
Line Regulation	± 5%	± 5%	± 5%
Load Regulation	± 5%	± 5%	± 5%
Current Output Tolerance @ Max. Load Channel-to-Channel	N/A N/A	± 5% @ 100% Dim ± 5% @ 50% Dim	N/A N/A
Turn On Delay Time	< 0.5 sec	< 0.5 sec	< 0.5 sec
Environmental			
Ambient Operating Temperature	-40°C to 50°C (-40°F to 125°F)	-40°C to 50°C (-40°F to 125°F)	-40°C to 50°C (-40°F to 125°F)
Maximum Case Temp. (Tcase)	90°C (194°F)	90°C (194°F)	90°C (194°F)
Storage Temperature	-40°C to +85°C (-40°F to 185°F)	-40°C to +85°C (-40°F to 185°F)	-40°C to +85°C (-40°F to 185°F)
Enclosure	NEMA 3R Rated	NEMA 3R Rated	NEMA 3R Rated
Cover Screws	Stainless Steel	Stainless Steel	Stainless Steel
Expected Lifetime	≥ 80,000 hrs @Tc ≤ 60°C	≥ 80,000 hrs @Tc ≤ 60°C	≥ 80,000 hrs @Tc ≤ 60°C
Dimming			
Dimming Style	Phase-Cut (120V) or 0-10V (120V to 277V)	Phase-Cut (120V) or 0-10V (120V to 277V)	Phase-Cut (120V) or 0-10V (120V to 277V)
Minimum Dimming Level	1%	1%	1%
Minimum Load for Dimming	8W	20W per Channel	40W
Dimming Curve	Linear	Linear	Linear
Protection			
Over Current Protection	Yes	Yes	Yes
Over Voltage Protection	Yes	Yes	Yes
Over Temperature Protection	Yes / Auto-Recovery	Yes / Auto-Recovery	Yes / Auto-Recovery
Overload Protection	Yes / Current Limit	Yes / Current Limit	Yes / Current Limit
Short Circuit Protection	Yes / Auto-Recovery	Yes / Auto-Recovery	Yes / Auto-Recovery
Connectors			
Lever Style Connectors	Pre-installed, all wire leads	Pre-installed, all wire leads	Pre-installed, all wire leads
Listing	UL Listed	UL Listed	UL Listed

MAX5-96-24 (96W) WIRING DIAGRAMS

Phase-Cut Dimmable Configuration

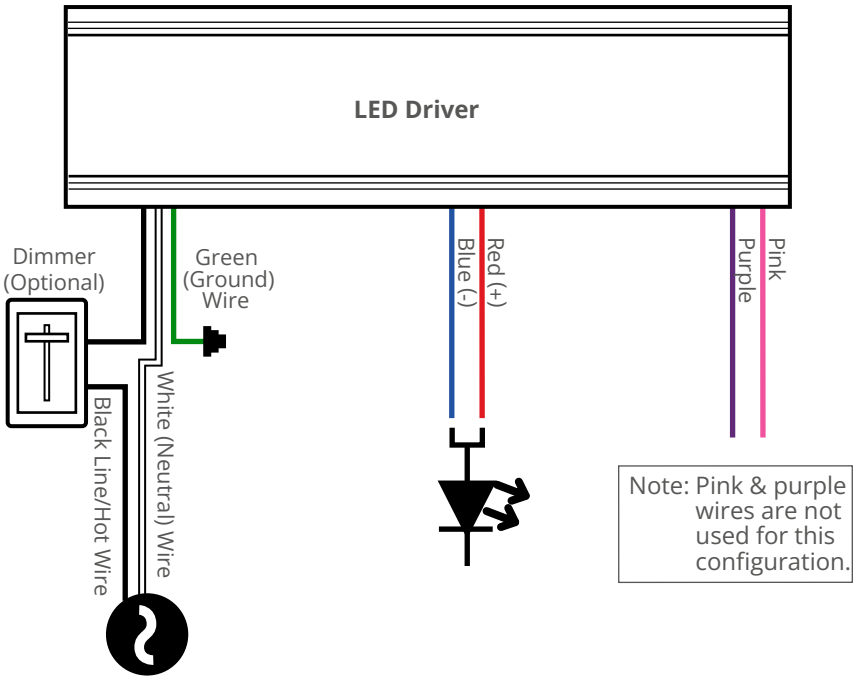

0-10V Dimmable Configuration

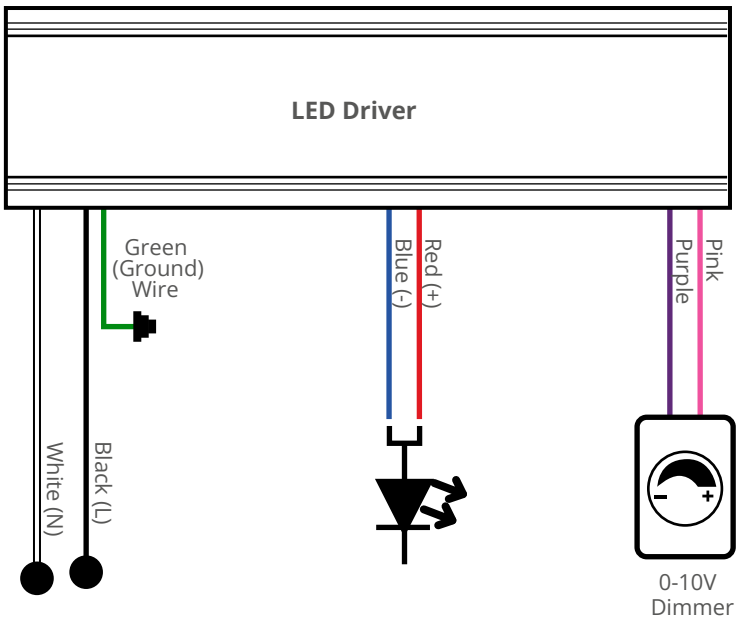

REV002 5/6/2026
We reserve the right to change and modify our products.
https://klusdesign.com, quotations@klusdesign.com
KLUS LLC, 3755 9th St. SW, Vero Beach, FL 32968

MAX5-MLT-3-96-24V (96W per Channel) WIRING DIAGRAMS

Phase-Cut Dimmable Configuration

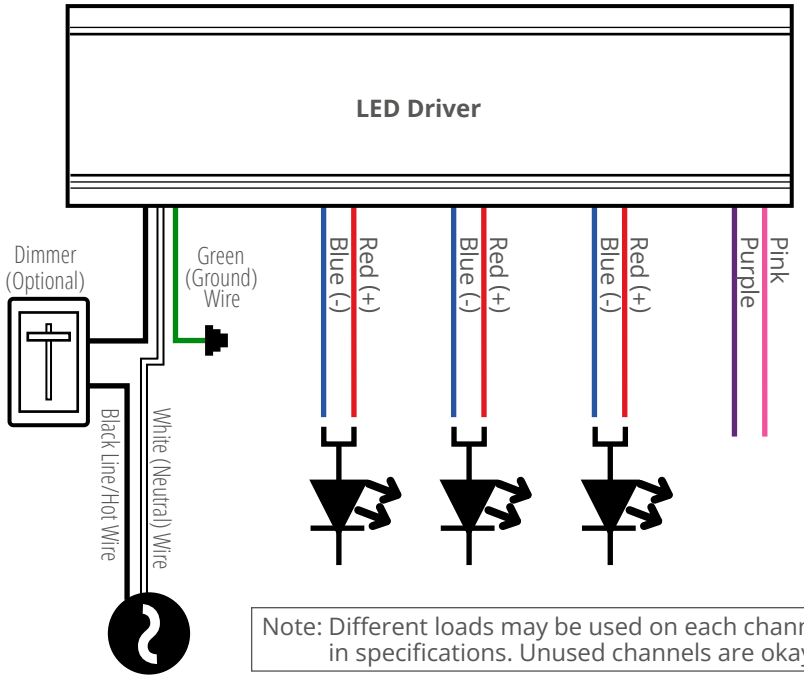

Note: Pink & purple wires are not used for this configuration.

Note: Different loads may be used on each channel, subject to minimum/maximum in specifications. Unused channels are okay.

0-10V Dimmable Configuration

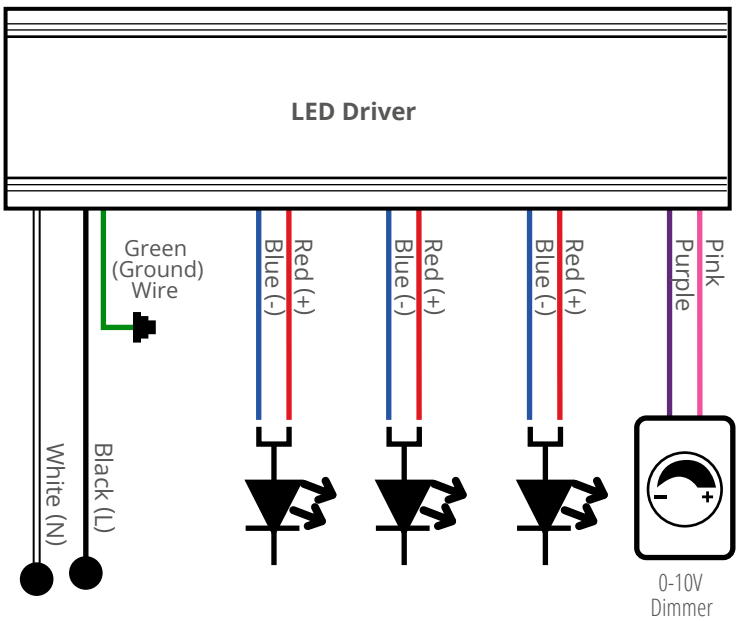

Note: Different loads may be used on each channel, subject to minimum/maximum in specifications. Unused channels are okay.

REV002 5/6/2026
We reserve the right to change and modify our products.
https://klusdesign.com, quotations@klusdesign.com
KLUS LLC, 3755 9th St. SW, Vero Beach, FL 32968

MAX5-300-24V (300W) WIRING DIAGRAMS

Phase-Cut Dimmable Configuration

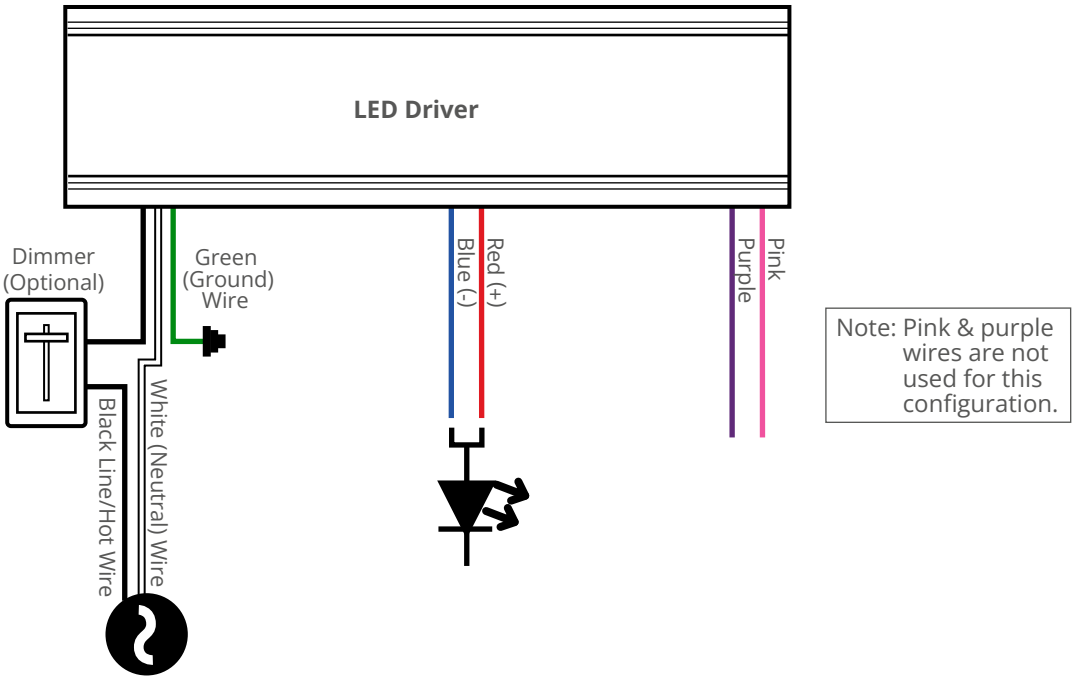

0-10V Dimmable Configuration

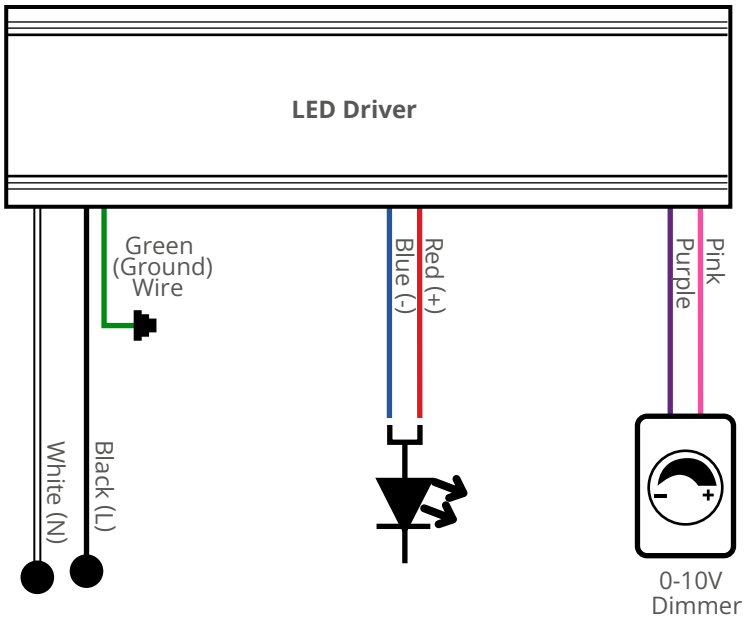

REV002 5/6/2026
We reserve the right to change and modify our products.
https://klusdesign.com, quotations@klusdesign.com
KLUS LLC, 3755 9th St. SW, Vero Beach, FL 32968

MAGNETIC DIMMABLE LED DRIVER



Key Features

- Dimmable with any standard MLV/Incandescent TRIAC- (Leading edge) dimmer switch
- Dual protection - primary and secondary auto-reset circuit breakers
- Nema 3R - Outdoor Use with Two knock-outs, one on each side
- ETL Listed, Certi¬fied to CSA Standard

Technical drawing

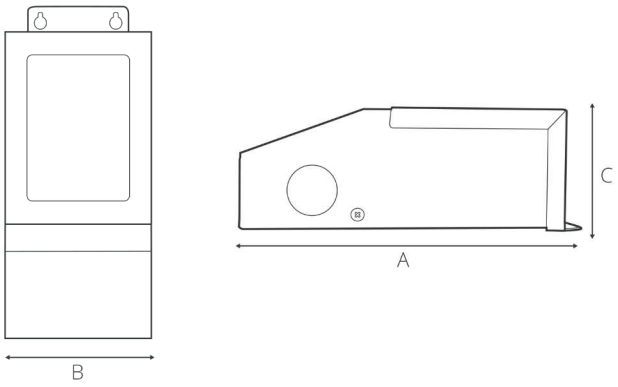

Technical data

Serial ref	Input Voltage	Max Output Power	Output Voltage	Output Current	Efficiency @ Max Load	Power Factor @ Max. Load	Weight	(A) Length In / (mm)	(B) Width In / (mm)	(C)Height In / (mm)
MD-20-24	120VAC	20W	24VDC	0.97A	>76%	>0.92	35oz	5.6"(142.2)	2.14"(54.3)	2.14" (54.3)
MD-40-24	120VAC	40W	24VDC	3.9A	>82%	>0.89	35oz	5.6"(142.2)	2.14"(54.3)	2.14" (54.3)
MD-60-24	120VAC	60W	24VDC	2.56A	>82%	>0.82	50oz	6.62"(168)	2.58"(56.6)	2.33" (59.1)
MD-96-24	120VAC	96W	24VDC	4A	>85%	>0.89	50oz	6.62"(168)	2.58"(56.6)	2.33" (59.1)

REV002 5/6/2026
We reserve the right to change and modify our products.
https://klusdesign.com, quotations@klusdesign.com
KLUS LLC, 3755 9th St. SW, Vero Beach, FL 32968

MAGNETIC DIMMABLE LED DRIVER



Key Features

- Dimmable with any standard MLV/Incandescent TRIAC- (Leading edge) dimmer switch
- Dual protection - primary and secondary auto-reset circuit breakers
- Nema 3R - Outdoor Use with Two knock-outs, one on each side
- ETL Listed, Certi¬fied to CSA Standard

Technical drawing

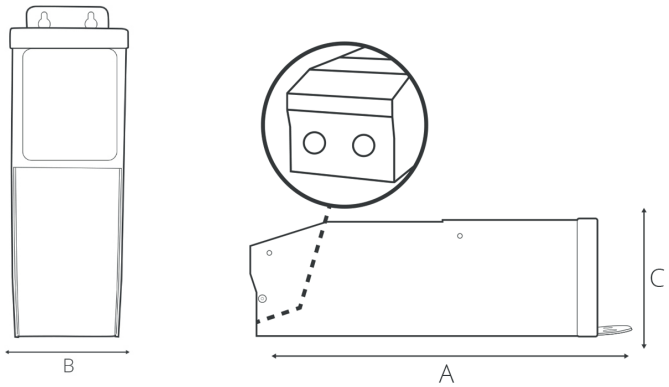

Voltage Drop Chart

	ON SPEC SHEET MAX DIST. (based on max capacity)		
	20 AWG wire	18 AWG wire	14 AWG wire
MLV			
300W	11 ft	18 ft	45 ft
200W	17 ft	28 ft	71 ft
150W	22 ft	36 ft	95 ft
96W	45 ft	55 ft	143 ft
60W	55 ft	90 ft	175 ft+
40W	90 ft	150 ft	175 ft+
20W	125 ft	140 ft	175 ft+

Technical data

Serial ref	Input Voltage	Max Output Power	Output Voltage	Output Current	Efficiency @ Max Load	Power Factor @ Max. Load	Weight	(A) Length In / (mm)	(B) Width In / (mm)	(C)Height In / (mm)
MD-150-24	120VAC	150W	24VDC	6.5A	>85%	>0.93	87oz	10.06"(255.5)	3.09"(78.5)	2.84" (72.1)
MD-200-24	120VAC	200W	24VDC	10.9A	>87%	>0.93	87oz	10.06"(255.5)	3.09"(78.5)	2.84" (72.1)
MD-300-24	120VAC	300W	24VDC	20.8A	>90%	>0.93	140oz	10.04"(255.1)	4.21"(107)	3,5" (88.8)

REV002 5/6/2026
We reserve the right to change and modify our products.
https://klusdesign.com, quotations@klusdesign.com
KLUS LLC, 3755 9th St. SW, Vero Beach, FL 32968

Constant Voltage Non-Dimmable LED Driver

KLUŚ Inspiring Solutions



UL Enclosure with
Integrated Junction Box

CLASS 2 | 12 / 24VDC | CE | MEETS TITLE 24/JA8 REQUIREMENTS

TYPE HL | c UL us LISTED | UL MX - NOM | RoHS Compliant

CLASS P | SELV | FC | IP66 | 120 - 277VAC

The KLUS Constant Voltage Driver is an electronic Class 2, non-dimmable LED driver with an integrated junction box, making it the perfect choice for tape lighting, tube lighting, linear lighting and multiple other commercial lighting applications. The UL enclosure is rated IP66 for indoor or outdoor installations and includes a separate input and output wiring compartment, each with three " knockouts for easy installation. The driver features hiccup mode, over current and short circuit protection, as well as an efficiency over >84% resulting in low operating case temperature.

Installation: Has an integrated junction box with multiple ⅞" knockouts
Driver Type: Class 2 Single Channel
Input Voltage: Universal 120VAC to 277VAC, 50/60Hz
Output Voltage: 12VDC & 24VDC
IP Rating: IP66
Listing: Available in UL Listed, Class P, Type HL
Certifications: UL8750, UL2043 Plenum Rated
Warranty: 5-Year
*Recommended Spacing between drivers – 5"

Dimensions			
30 / 60 / 96 / 50	Length	12.10"	(307.34mm)
	Width	2.36"	(59.94mm)
	Height	1.40"	(35.6mm)

Ordering Guide

MODEL		POWER		OUTPUT
ND		**30** - 30 W **60** - 60 W **96** - 96 W **50** - 50 W		**24V** - 24VDC **24V** - 24VDC **24V** - 24VDC **12V** - 24VDC

Integrated Junction Box (Drawing Not to Scale)

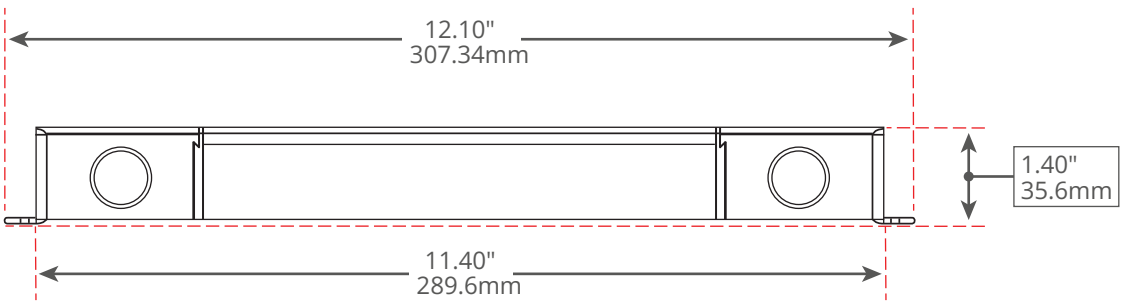

REV002 5/6/2026
We reserve the right to change and modify our products.
https://klusdesign.com, quotations@klusdesign.com
KLUS LLC, 3755 9th St. SW, Vero Beach, FL 32968

Specifications

Part Numbers:	ND-30-24V	ND-50-12V	ND-60-24V	ND-96-24V
Input				
Input Voltage Range	120 - 277VAC ± 10%			
Input Frequency	50 / 60Hz	50 / 60Hz	50 / 60Hz	50 / 60Hz
Input Current	0.96A Max	0.96A Max	0.96A Max	0.96A Max
Inrush Current	5A Max@120VAC 30A Max@277VAC	5A Max@120VAC 30A Max@277VAC	5A Max@120VAC 30A Max@277VAC	5A Max@120VAC 30A Max@277VAC
Efficiency	> 84% Max	> 80% Max	> 84% Max	> 84% Max
Power Factor	> 0.91	> 0.95	> 0.95	> 0.95
THD	< 20%	< 20%	< 20%	< 20%
Output				
Output Voltage	24VDC	12VDC	24VDC	24VDC
Max Load	30W	50W	60W	96W
Output Current @ Max Load	1.3A	4.2A	2.6A	4.1A
Output Ripple	< 3%	< 3%	< 3%	< 3%
Line Regulation	< 2%	< 2%	< 2%	< 2%
Load Regulation	< 3%	< 5%	< 3%	< 3%
Turn-On Delay Time	< 0.3 Sec	< 0.3 Sec	< 0.3 Sec	< 0.3 Sec
Environmental				
Env. Protection Rating	IP66	IP66	IP66	IP66
Ambient Operating Temp.	-25°C - +40°C (-13°F - 104°F)	-25°C - +40°C (-13°F - 104°F)	-25°C - +40°C (-13°F - 104°F)	-25°C - +40°C (-13°F - 104°F)
Max Case Temp. (Tcase)	80°C (176°F)	80°C (176°F)	80°C (176°F)	80°C (176°F)
Storage Temperature	-40°C - +85°C (-40°F - 185°F)	-40°C - +85°C (-40°F - 185°F)	-40°C - +85°C (-40°F - 185°F)	-40°C - +85°C (-40°F - 185°F)
Expected Lifetime	50k hours (>65°C) Tc	50k hours (>65°C) Tc	50k hours (>65°C) Tc	50k hours (>65°C) Tc
Audible Noise	<24dB Class A	<24dB Class A	<24dB Class A	<24dB Class A
Protection				
Over Current Protection	Yes	Yes	Yes	Yes
Over Voltage Protection	Yes	Yes	Yes	Yes
Over Temp. Protection	Yes/Hiccup Mode	Yes/Hiccup Mode	Yes/Hiccup Mode	Yes/Hiccup Mode
Over Load Protection	Yes/Current Limit	Yes/Current Limit	Yes/Current Limit	Yes/Current Limit
Short Circuit Protection	Yes/Current Limit	Yes/Current Limit	Yes/Current Limit	Yes/Current Limit

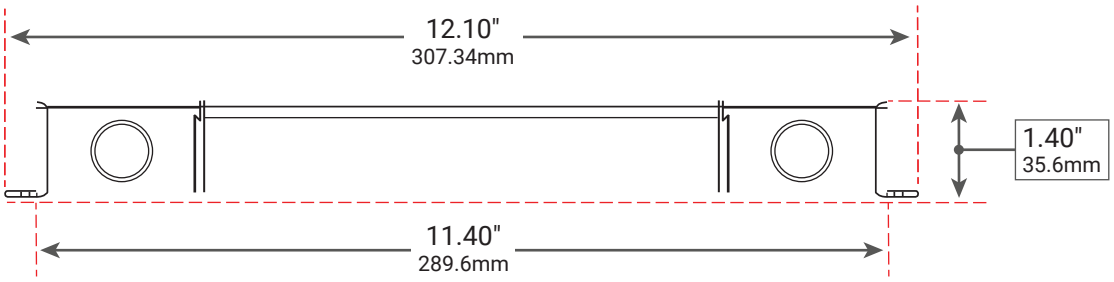

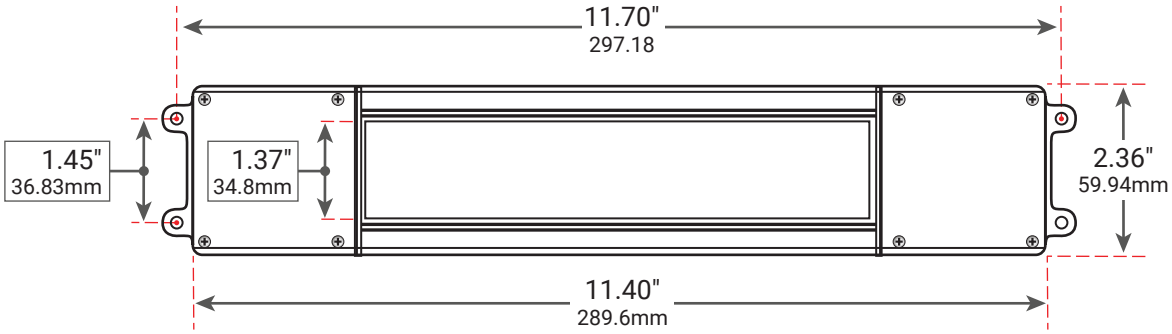

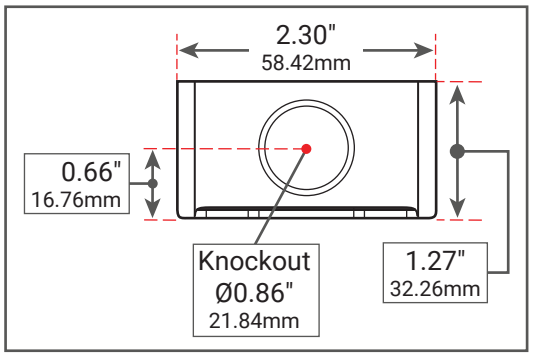

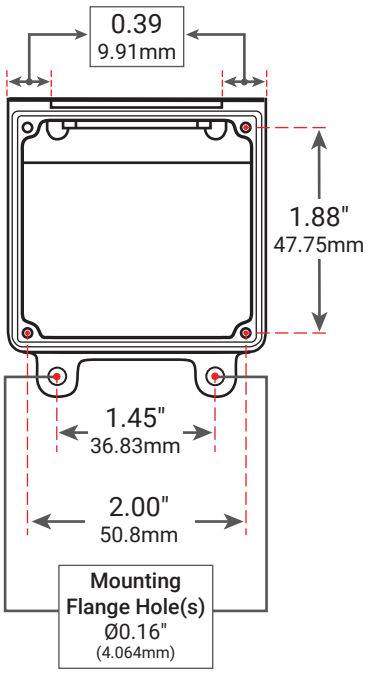

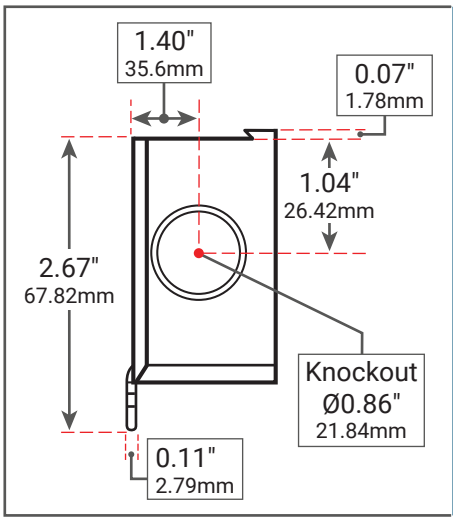

REV002 5/6/2026
We reserve the right to change and modify our products.
https://klusdesign.com, quotations@klusdesign.com
KLUS LLC, 3755 9th St. SW, Vero Beach, FL 32968

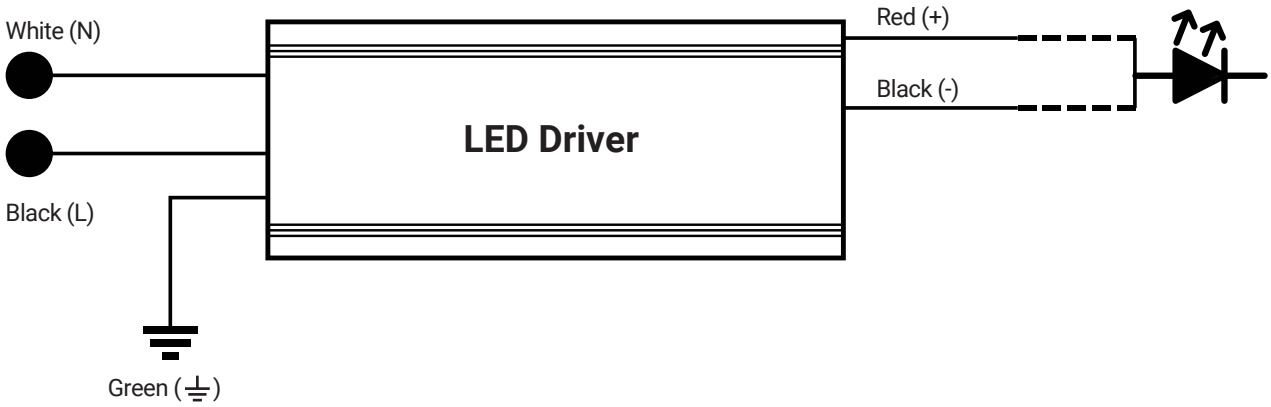

REV002 5/6/2026
We reserve the right to change and modify our products.
https://klusdesign.com, quotations@klusdesign.com
KLUS LLC, 3755 9th St. SW, Vero Beach, FL 32968

PWM

40W, Class 2 / 60W, Class 2 / 90W, Class 2 / 120W, Class 1 / 24V LED Drivers / 120-277 VAC / IP67 Outdoor Rating

Can be used with all static white LEDs



PWM series is a 40-120W LED AC/DC LED driver featuring a constant voltage mode with PWM style output, which is able to maintain the color temperature and the brightness homogeneity when driving all kinds of LED strips. The PWM drivers overate from 90~305VAC and offers rated voltage of 24V. Thanks to the high efficiency up to 90%, with the fan-less design, the entire series is able to operate for -40°C ~ +85°C case temperature under free air convection. The entire series is rated with IP67 ingress protection level and is suitable to work for dry, damp, or wet locations. The PWM series is equipped with dimming function that varies the duty cycle of the output, providing great flexibility for LED strip applications.

Key Features

- Constant Voltage PWM style Output
- Plastic housing with class 2 design
- Universal input Voltage - 90 to 305VAC
- IP67 - For both indoor and outdoor use
- Universal input Voltage - 90 to 305VAC

Product Name:	EDPS
Description:	Constant Voltage PWM Dimming LED Driver
Installation:	No junction box, with wire leads
Driver Type:	Class 2 Single Channel (up to 90W, 120W is non-Class 2)
Dimming:	PWM dimming down to 0%
Input Voltage:	Universal 90VAC to 305VAC, 50/60Hz
Output Voltage:	24VDC
Wattage:	40W / 60W / 90W / 120W
IP Rating:	IP67
Listing:	UR Recognized
Certifications:	UL8750, UL2043 Plenum Rated

Dimensions			
40/60	Length	5.91"	(150mm)
	Width	2.09"	(53mm)
	Height	1.38"	(35mm)
90	Length	6.73"	(171mm)
	Width	2.48"	(63mm)
	Height	1.48"	(37.5mm)
120	Length	7.52"	(191mm)
	Width	2.48"	(63mm)
	Height	1.48"	(37.5m)

MODEL		POWER		OUTPUT
	-		-	
EDPS		**40** - 40 W **60** - 60 W **90** - 90 W **120** - 120 W		**24V** - 24VDC

REV002 5/6/2026

https://klusdesign.com, quotations@klusdesign.com
KLUS LLC, 3755 9th St. SW, Vero Beach, FL 32968

PWM

40W, Class 2 / 60W, Class 2 / 90W, Class 2 / 120W, Class 1 / 24V LED Drivers / 120-277 VAC / IP67 Outdoor Rating

Can be used with all static white LEDs

MODEL		EDPS-40-24	EDPS-60-24	EDPS-90-24	EDPS-120-24
OUTPUT	DC VOLTAGE	24V			
	RATED CURRENT	1.67A	2.5A	3.75A	5A
	RATER POWER	40.08W	60W	90W	120W
	DIMMING RANGE	0 ~ 100%			
	PWM FREQUENCY (Typ.)	1.47kHz			
	SETUP, RISE TIME *note.2*	500ms, 80ms/ 115VAC or 230VAC			
	HOLD UP TIME (Typ.)	16ms/115VAC or 230VAC			
INPUT	VOLTAGE RANGE *note.3*	90 ~ 305VAC 127 ~ 431VDC			
	FREQUENCY RANGE	47 ~ 63Hz			
	POWER FACTORY (Typ.)	PF>0.98/115VAC, PF>0.96/230VAC, PF>0.94/277VAC @ full load			
	TOTAL HARMONIC DISTORTION	THD< 20%(@load≧60%/115VAC, 230VAC; @load≧75%/277VAC)			
	EFFICIENCY (Typ.)	89%		90.50%	90%
	AC CURRENT (Typ.)	0.6A/115VAC 0.3A/230VAC 0.25A/277VAC	0.8A/115VAC 0.4A/230VAC 0.32A/277VAC	0.95A/115VAC 0.5A/230VAC 0.4A/277VAC	1.3A/115VAC 0.65A/230VAC 0.55A/277VAC
	INRUSH CURRENT (Typ.)	COLD START 60A(twidth=550μs measured at 50% Ipeak) at 230VAC; Per NEMA 410			
	MAX. NO. of PSUs on 16A CIRCUIT BREAKER	9 units (circuit breaker of type B) / 16 units (circuit breaker of type C) at 230VAC		3 units (circuit breaker of type B) / 6 units (circuit breaker of type C) at 230VAC	4 units (circuit breaker of type B) / 6 units (circuit breaker of type C) at 230VAC
	LEAKAGE CURRENT	<0.25mA / 277VAC			
	NO LOAD POWER CONSUMPTION	<0.5W			
PROTECTION	OVERLOAD	108 ~ 125% rated output power			
		Hiccup mode, recovers automatically after fault condition is removed			
	SHORT CIRUIT	Shut down o/p voltage, re-power on to recover			Hiccup mode
	OVER VOLTAGE	28 ~ 34V			
		Shut down o/p voltage, re-power on to recover			
	OVER TEMPERATURE	Shut down o/p voltage, re-power on to recover			
ENVIRONMENT	WORKING TEMP.	Tcase=-40 ~ +85℃			Tcase=-40 ~ +90℃
	MAX. CASE TEMP.	Tcase=+85℃			Tcase=+90℃
	WORKING HUMIDITY	20 ~ 95% RH non-condensing			
	STORAGE TEMP., HUMIDITY	-40 ~ +80℃, 10 ~ 95% RH			
	TEMP. COEFFICIENT	±0.03%/℃ (0 ~ 50℃)			±0.03%/℃ (0 ~ 45℃)
	VIBRATION	10 ~ 500Hz, 5G 12min./1cycle, period for 72min. each along X, Y, Z axes			
SAFETY AND EMC	SAFETY STANDARDS *note.5*	UL8750, CSA C22.2 No. 250.13-12; ENEC EN61347-1, EN61347-2-13 independent,EN62384, IP67, BIS IS15885, EAC TP TC 004,GB19510.1,GB19510.14 approved; Design refer to EN60335-1			
	WITHSTAND VOLTAGE	I/P-O/P:3.75KVAC			
	ISOLATION RESISTANCE	I/P-O/P:100M Ohms / 500VDC / 25℃/ 70% RH			
	EMC EMISSION *note.6*	Compliance to EN55015, EN61000-3-2 Class C (@load≧60%) ; EN61000-3-3,GB17743 and GB17625.1,EAC TP TC 020			
	EMC IMMUNITY	Compliance to EN61000-4-2,3,4,5,6,8,11; EN61547, light industry level (surge immunity Line-Line 2KV),EAC TP TC 020			
OTHER	MTBF Telcordia SR-332 (Bellcore)	995.5K hrs min.	996K hrs min.	902.4K hrs min.	860.4K hrs min.
	MTBF MIL-HDBK-217F (25℃)	270.02 hrs min.	271.03K hrs min.	224.2K hrs min.	228.7K hrs min.
	DIMENSION	150*53*35mm (L*W*H)		171*63*37.5mm (L*W*H)	191*63*37.5mm (L*W*H)
	PACKING	0.49Kg;30pcs/15.7Kg/1.0CUFT		0.77Kg; 18pcs/14.9Kg/0.97CUFT	0.97Kg; 15pcs/15.6Kg/0.87CUFT

NOTES

1. All parameters NOT specially mentioned are measured at 230VAC input, rated current, and 25°C of ambient temperature.
2. De-rating may be needed under low input voltages.
3. Length of set up time is measure at first cold start. Turning ON/OFF the driver may lead to increase of the set up time.
4. The driver is considered as a component that will be operated in combination with final equipment. Since EMC performance will be affected by the complete installation, the final equipment manufacturers must re-qualify EMC Directive on the complete installation again.
5. This series meets the typical life expectancy of >50,000 hours of operation when Tcase, particularly TMP per DLC is about 75°C or less.
6. Please refer to the warranty state ment on MEAN WELL's website at http://www.meanwell.com
7. The ambient temperature derating of 3.5°C/1000m with fanless models and of 5°C/1000m with fan models for operating altitude higher than 2000m(6500ft).
8. For any application note and IP waterproof function installation caution, please refer to use manual before using (https://www.meanwell.com/upload/PDF/LED_EN/pdf)

https://klusdesign.com, quotations@klusdesign.com
KLUS LLC, 3755 9th St. SW, Vero Beach, FL 32968

Can be used with all static white LEDs

Recommend Mounting Direction

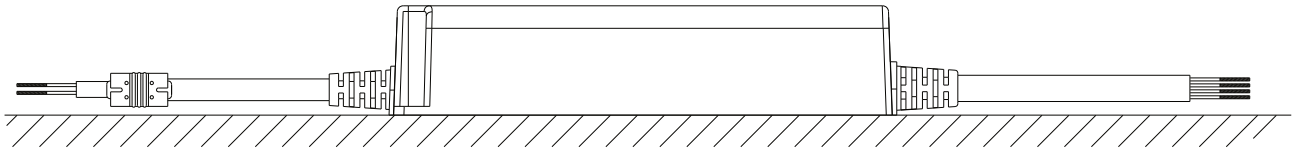

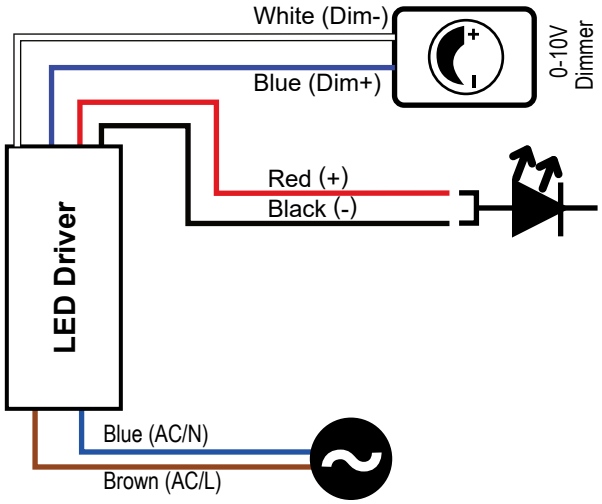

Cautions

- Before commencing any installation or maintenance work, please disconnect the power supply from the utility. Ensure that it cannot be re-connected inadvertently!
- Keep proper ventilation around the unit and do not stack any object on it. Also a 10-15 cm clearance must be kept wher the adjacent device is a heat source.
- Mounting orientations other than standard orientation or operate under high ambient temperature may increase the internal component temperature and will require a de-rating in output current.
- Current rating of an approved primary/secondary cable should be greater than or equal to that of the unit. Please refer to its specification.
- For LED drivers with waterproof connectors, verify that the linkage between the unit and the lighting fixture is tight so that water cannot intrude into the system.
- For dimmable LED drivers, make sure that your dimming controller is capable of driving these units. PWM series require 0.15mA each unit.
- Tc max. is identified on the product label. Please make sure that temperature of Tc point will not exceed limit.
- DO NOT connect "DIM- to -V".
- Suitable for indoor use or outdoor use without direct sunlight exposure. Please avoid immerse in the water over 30 minutes.
- The power supply is considered as a component that will be operated in combination with final equipment. Since EMC performance will be affected by the complete installation, the final equipment manufacturers must re-qualify EMC.
- Directive on the complete installation again.
- For more information about installation, Please refer to: http://www.meanwell.com/manual.html for details.

https://klusdesign.com, quotations@klusdesign.com
KLUS LLC, 3755 9th St. SW, Vero Beach, FL 32968