MOD-100 Extrusion

Ref. A18049

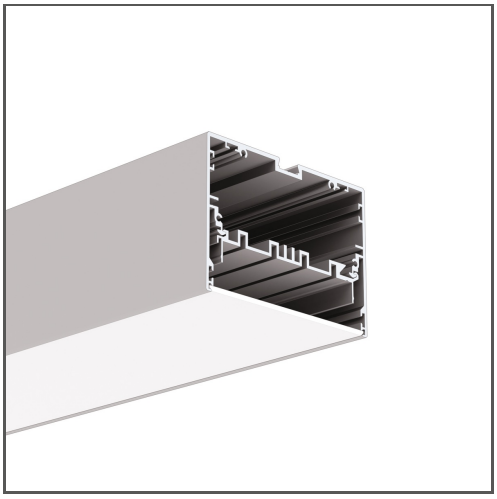

KEY FEATURES

- Installation from below, wall to wall
- High lumen output
- Up/down lighting
- Easy maintenance
- Possibility to use current modules with efficiency up to 190lm/W and CRI>90. Available upon request.
- Possiblity to obtain UGR < 19

APPLICATION

main and decorative lighting

MOUNTING

suspended, using dedicated accessories
the cover is cut to the length of the lighting fixture

ADDITIONAL INFORMATION

- the luminous efficiency can be increased by 20% with the use of REFLEX 16-60 reflectors
- both LED strips and LED current modules can be used
- safety due to high vibration resistance
- when choosing a different length of profiles / covers than available in the standard, you should additionally choose the cutting service at KLUŚ
- NCS Premium paint option - minimum order quantity 30pcs - available on order within 14 days

IP PROTECTION RATING

IP20

MOUNTING METHOD

Suspended

TECHNICAL DRAWING

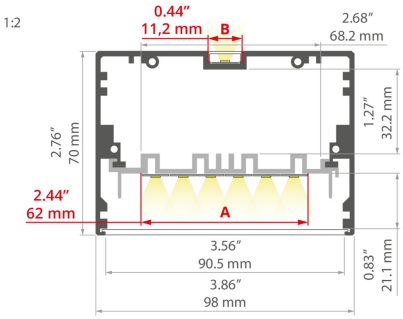

AVAILABLE COLOURS

LENGTH	REF
39.4"	A18049A_1
78.9"	A18049A_2

TECHNICAL SPECIFICATIONS

Material	aluminum
Color	silver anodized
Possible fixture IP	20
Possible fixture shapes	linear, polygonal
Profile cross-section	rectangular
Width	3.9"
Height	2.8"
LED gluing width A	2.4"
LED gluing width B	0.4"
Max. number of LED strips A (0.31" wide)	1
Width of the glow	91.45 mm
Max power of a single KLUŚ LED strip	7.3 W/ft
Dedicated space for power supply	yes
Possibility of obtaining a line of light	yes
Building type	Commercial, Retail, Entertainment/ Arts, Hotel / Restaurant
Facility zone	office, lobby / foyer
The cover is cut to the length of the profile	yes
Can be easily connected into runs	yes
Wire out back of extrusion	yes
Two directional lighting for suspended fixtures	yes

RELATED ACCESSORIES > COVERS

NAME	KEY FEATURES	MATERIAL	MATERIAL TRANSMITTANCE	COLOR	REF.
HS-11 Cover	- For indoor and outdoor applications - UV resistant - hight durability	PC	59 %	frosted	B17208F
			88 %	clear	B17208C
KA-11 Cover	- maximum brightness - indoor use - basic - universal	PC	67 %	frosted	B17064F
			89 %	clear	B17064C
LIGER-11 Cover	- hight light quality - Ease of obtaining a line of light - perfectly diffusing - For indoor and outdoor applications	PC	21 %	black	B17037B
			59 %	satin	B17037S

MOD-100 Extrusion
Ref. A18049

NAME	KEY FEATURES	MATERIAL	MATERIAL TRANSMITTANCE	COLOR	REF.
HSP-90 Cover	- indoor use - Ease of obtaining a wide line of light	PC	68 %	frosted	B17166F

LINE OF LIGHT TABLE

LED TAPE	HSP-90 FROSTED
K-0360-24	✓ (6)
K-0720-24	✓ (6)
K-1080-24	✓ (6)
K-HD-0430-24	✓ (6)
K-HD-0830-24	✓ (6)
K-HD-1260-24	✓ (6)
K-CR-1220-24	✓ (6)
K-CR-1275-24	✓ (6)
K-CRHD-1820-24	✓ (6)
K-CRHD-1910-24	✓ (6)
K-HEHD-0480-24	✓ (6)
K-HEHD-0960-24	✓ (6)
K-HEHD-1440-24	✓ (6)
K-HEHD-1920-24	✓ (6)
K-HEHD-0320-24	✓ (6)
K-RGBW-1920-120-24	✓ (6)
K-RGB-1200-24	✓ (6)
K-18D30-0960-24	✓ (6)
K-2400-24	✓ (6)
K-30/18-1770-010V-24V	✓ (6)
KWP-30/18-1770-010-24	✓ (6)
K-HEHD-1440-24-40C	✓ (6)
K-SD-1440-24	✓ (6)
K-RGBW-1920-160-24	✓ (6)
KWP-GRGBW-1920-120-24	✓ (6)
K-SDCR-22T50-1530-24	✓ (6)
KWP-SDCR-22T50-1530-24	✓ (6)

Description

✓ - Line of Light for a number (X) of rows - Pixel free imaging
X - Visible Dotting from Diodes
HL - Centered Line of Light - Concentrated in middle
HL (X) - Centered Line of Light for a number (X) of rows - Concentrated in middle

Line of Light Guide



Clean Line of Light (Pixel free imaging)



Centered Line of Light



Visible Dotting from Diodes

RELATED ACCESSORIES > END CAPS

NAME	MATERIAL	COLOR	REF.
MOD-100 End cap 	ABS	gray	24334

RELATED ACCESSORIES > OTHER ACCESSORIES > CANOPIES

NAME	KEY FEATURES	MATERIAL	COLOR	REF.
Fi-60mm Canopy	- Convenient cable length adjustment, in the ZM system	steel	gray lacquered white lacquered black lacquered	C24540L01 C24540L10 C24540L07

MOD-100 Extrusion
Ref. A18049

RELATED ACCESSORIES > OTHER ACCESSORIES > FASTENERS AND HEADS FOR EXTRUSIONS

NAME	KEY FEATURES	MATERIAL	COLOR	REF.
M4-12 Fastener	- Cable length adjustment	stainless steel, brass, nylon	silver chrome white lacquered black lacquered	C28118N00 C28118C10 C28118C07

RELATED ACCESSORIES > OTHER ACCESSORIES > CONNECTORS

NAME	KEY FEATURES	MATERIAL	COLOR	REF.
ZM Connector		stainless steel	silver	42720 42728 C28070N00 C28071N00 C28072N00 C28073N00 C28074N00 C28075N00 C28243N00
Connector ZM-G		stainless steel	silver	42304 42308 42310 42324 42326 42328 42330 42332 42334 42336 42338
ZM-PION Connector	- for connecting profiles in the vertical plane	stainless steel	silver	42314 42316 42320 42718 42719 C28084N00 C28085N00 C28086N00 C28087N00 C28088N00

RELATED ACCESSORIES > OTHER ACCESSORIES > SUSPENSION AND MOUNTING SETS

NAME	KEY FEATURES	MATERIAL	COLOR	REF.
RG-1 Fastener set	- Cable adjustment at the ceiling, cable included	brass	silver glossy black colored	C28230P00 C28230L07

RELATED ACCESSORIES > RELATED LED > HIGH EFFICACY

NAME	KEY FEATURES	IP PROTECTION RATING	POWER CONSUMPTION	REF.
K-HEHD-0320-24 LED tape	- CRI over 95 - High Efficacy	20	1 W/ft	K-HEHD27-0320-24 K-HEHD30-0320-24 K-HEHD35-0320-24 K-HEHD40-0320-24
K-HEHD-0480-24 LED tape	- CRI over 95 - High Efficacy	20	1.5 W/ft	K-HEHD22-0480-24 K-HEHD25-0480-24 K-HEHD27-0480-24 K-HEHD30-0480-24 K-HEHD35-0480-24 K-HEHD40-0480-24 K-HEHD50-0480-24
K-HEHD-0960-24 LED tape	- CRI over 95 - High Efficacy	20	2.9 W/ft	K-HEHD22-0960-24 K-HEHD25-0960-24 K-HEHD27-0960-24 K-HEHD30-0960-24 K-HEHD35-0960-24 K-HEHD40-0960-24 K-HEHD50-0960-24
K-HEHD-1440-24 LED tape	- CRI over 95 - High Efficacy	20	4.4 W/ft	K-HEHD22-1440-24 K-HEHD25-1440-24 K-HEHD27-1440-24 K-HEHD30-1440-24 K-HEHD35-1440-24 K-HEHD40-1440-24 K-HEHD50-1440-24
LED tape K-HEHD-1920-24	- CRI over 95 - High Efficacy	20	5.9 W/ft	K-HEHD22-1920-24 K-HEHD25-1920-24 K-HEHD27-1920-24 K-HEHD30-1920-24 K-HEHD35-1920-24 K-HEHD40-1920-24 K-HEHD50-1920-24

MOD-100 Extrusion
Ref. A18049

RELATED ACCESSORIES > RELATED LED > CRI 95+

NAME	KEY FEATURES	IP PROTECTION RATING	POWER CONSUMPTION	REF.
K-CR-1210-24 LED tape	- CRI over 95	20	1.5 W/ft	K-CR22-1210-24 K-CR27-1210-24
K-CRHD-1910-24 LED tape	- CRI over 95 - high LED density	20	2.8 W/ft	K-CRHD27-1910-24 K-CRHD35-1910-24 K-CRHD40-1910-24
K-CR-1220-24 LED tape	- CRI over 95	20	2.9 W/ft	K-CR22-1220-24 K-CR25-1220-24 K-CR27-1220-24 K-CR30-1220-24 K-CR35-1220-24 K-CR40-1220-24 K-CR50-1220-24
K-CR-1275-24 LED tape	- CRI over 95	20	4.4 W/ft	K-CR22-1275-24 K-CR25-1275-24 K-CR27-1275-24 K-CR30-1275-24 K-CR35-1275-24 K-CR40-1275-24 K-CR50-1275-24
K-HEHD-1440-24-40C LED tape	- High Efficacy - cold weather -40F	20	4.4 W/ft	K-HEHD22-1440-24-40C K-HEHD25-1440-24-40C K-HEHD27-1440-24-40C K-HEHD30-1440-24-40C K-HEHD35-1440-24-40C K-HEHD40-1440-24-40C K-HEHD50-1440-24-40C
K-CRHD-1820-24 LED tape	- CRI over 95 - high LED density	20	5.6 W/ft	K-CRHD27-1820-24

RELATED ACCESSORIES > RELATED LED > CRI 90+

NAME	KEY FEATURES	IP PROTECTION RATING	POWER CONSUMPTION	REF.
K-2400-24 LED tape	- high power	20	7.3 W/ft	K-27-2400-24 K-30-2400-24 K-35-2400-24 K-40-2400-24 K-50-2400-24

RELATED ACCESSORIES > RELATED LED > ADJUSTABLE WHITE / DIM TO WARM

NAME	KEY FEATURES	IP PROTECTION RATING	POWER CONSUMPTION	REF.
K-30/18-1770-010V-24V LED tape		20	3.5 W/ft	K-30/18-1770-010V-24V
K-SDCR-22T50-1530-24 LED tape	- Tuneable white 2200K-5000K	20	4.7 W/ft	K-SDCR-22T50-1530-24
KWP-30/18-1770-010-24 LED tape		65	3.5 W/ft	KWP-30/18-1770-010-24
LED tape KWP-G30/18-1770-010-24		65	3.5 W/ft	KWP-G30/18-1770-010-24
KWP-SDCR-22T50-1530-24 LED tape	- Tuneable white 2200K-5000K	65	4.7 W/ft	KWP-SDCR-22T50-1530-24

RELATED ACCESSORIES > ELECTRONICS > SWITCHES

NAME	KEY FEATURES	IP PROTECTION RATING	REF.
Proximity switch UNI	- touchless switch - width only 7mm	20	E61579