FOLED-50-BOK Extrusion

Ref. A57945

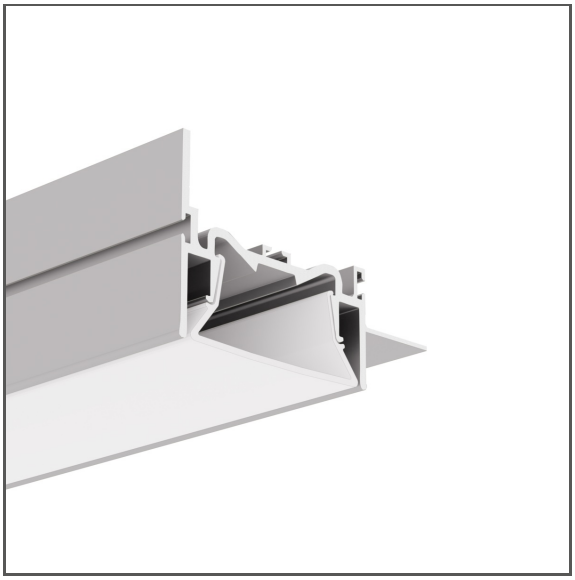

IP20

- Installation of lighting and stretch films to walls
- High lumen output
- Mounting to 12,5 mm - 0.50" drywall
- Non visible aluminum elements
- Line of light flush with the surface

APPLICATION

- lighting recessed in surfaces made of stretch film and in drywall

MOUNTING

- to the surface, using properly selected screws

ADDITIONAL INFORMATION

- the extrusion has grooves for the attachment of the hooks from the stretch film
- when choosing a different length of profiles / covers than available in the standard, you should additionally choose the cutting service at KLUŚ

TECHNICAL DRAWING

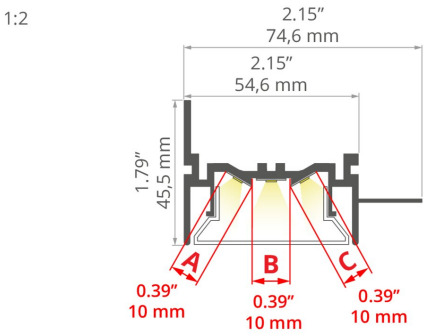

SAMPLE PROJECTS



RELATED ACCESSORIES > RELATED LED > CRI 95+

Name	Key features	IP protection rating	Power consumption	Ref.

FOLED-50-BOK Extrusion

Ref. A57945

Name	Key features	IP protection rating	Power consumption	Ref.
K-CR-1210-24 LED tape	- CRI over 95	20	1.5 W/ft	K-CR22-1210-24 K-CR25-1210-24 K-CR27-1210-24 K-CR30-1210-24 K-CR35-1210-24 K-CR40-1210-24 K-CR50-1210-24
K-CRHD-0530-24 LED tape,	- CRI over 95	20	1.6 W/ft	K-CRHD22-0530-24 K-CRHD25-0530-24 K-CRHD27-0530-24 K-CRHD30-0530-24 K-CRHD35-0530-24 K-CRHD40-0530-24 K-CRHD50-0530-24
K-CR-1220-24 LED tape	- CRI over 95	20	2.9 W/ft	K-CR22-1220-24 K-CR25-1220-24 K-CR27-1220-24 K-CR30-1220-24 K-CR35-1220-24 K-CR40-1220-24 K-CR50-1220-24
K-CR-1275-24 LED tape	- CRI over 95	20	4.4 W/ft	K-CR22-1275-24 K-CR25-1275-24 K-CR27-1275-24 K-CR30-1275-24 K-CR35-1275-24 K-CR40-1275-24 K-CR50-1275-24
K-CRHD-1820-24 LED tape	- CRI over 95 - high LED density	20	5.6 W/ft	K-CRHD22-1820-24 K-CRHD25-1820-24 K-CRHD27-1820-24 K-CRHD30-1820-24 K-CRHD35-1820-24 K-CRHD40-1820-24 K-CRHD50-1820-24

RELATED ACCESSORIES > RELATED LED > HIGH EFFICACY

Name	Key features	IP protection rating	Power consumption	Ref.
K-HEHD-0320-24 LED tape	- CRI over 95 - High Efficacy	20	1 W/ft	K-HEHD22-0320-24 K-HEHD25-0320-24 K-HEHD27-0320-24 K-HEHD30-0320-24 K-HEHD35-0320-24 K-HEHD40-0320-24 K-HEHD50-0320-24
K-HEHD-0480-24 LED tape	- CRI over 95 - High Efficacy	20	1.5 W/ft	K-HEHD22-0480-24 K-HEHD25-0480-24 K-HEHD27-0480-24 K-HEHD30-0480-24 K-HEHD35-0480-24 K-HEHD40-0480-24 K-HEHD50-0480-24
K-HEHD-0960-24 LED tape	- CRI over 95 - High Efficacy	20	2.9 W/ft	K-HEHD22-0960-24 K-HEHD25-0960-24 K-HEHD27-0960-24 K-HEHD30-0960-24 K-HEHD35-0960-24 K-HEHD40-0960-24 K-HEHD50-0960-24

FOLED-50-BOK Extrusion

Ref. A57945

Name	Key features	IP protection rating	Power consumption	Ref.
K-HEHD-1440-24 LED tape	- CRI over 95 - High Efficacy	20	4.4 W/ft	K-HEHD22-1440-24 K-HEHD25-1440-24 K-HEHD27-1440-24 K-HEHD30-1440-24 K-HEHD35-1440-24 K-HEHD40-1440-24 K-HEHD50-1440-24
LED tape K-HEHD-1920-24	- CRI over 95 - High Efficacy	20	5.9 W/ft	K-HEHD22-1920-24 K-HEHD25-1920-24 K-HEHD27-1920-24 K-HEHD30-1920-24 K-HEHD35-1920-24 K-HEHD40-1920-24 K-HEHD50-1920-24

RELATED ACCESSORIES > RELATED LED > CRI 90+

Name	Key features	IP protection rating	Power consumption	Ref.
K-2400-24 LED tape	- high power	20	7.3 W/ft	K-27-2400-24 K-30-2400-24 K-35-2400-24 K-40-2400-24 K-50-2400-24

RELATED ACCESSORIES > RELATED LED

Name	Key features	IP protection rating	Power consumption	Ref.
K-27T50-1440-24 LED tape	- RGB+Tunable White	20	4.4 W/ft	K-27T50-1440-24

RELATED ACCESSORIES > RELATED LED > RGB / RGB-W / RGB-CTT

Name	Key features	IP protection rating	Power consumption	Ref.
K-RGBW-1920-120-24 LED tape	- RGBW (3000K)	20	5.9 W/ft	K-RGBW-1920-120-24
K-RGBW-1920-160-24 LED tape	- RGBW (3000K)	20	5.9 W/ft	K-RGBW-1920-160-24
KWP-GRGBW-1920-120-24 LED tape	- RGBW (3000K)	65	5.9 W/ft	KWP-GRGBW-1920-120-24

RELATED ACCESSORIES > OTHER ACCESSORIES > CONNECTORS

Name	Material	Color	Ref.

FOLED-50-BOK Extrusion

Ref. A57945

Name	Material	Color	Ref.
ZM Connector	stainless steel	silver silver silver silver black colored colorless non colored black colored silver black colored silver black colored silver black colored silver black colored silver black colored silver silver	42716 42717 42720 42728 C24797C07 C24797N00 C28070C07 C28070N00 C28071C07 C28071N00 C28072C07 C28072N00 C28073C07 C28073N00 C28074C07 C28074N00 C28075C07 C28075N00 C28243N00
ZM-NA Connector	stainless steel	silver	42305 42339 42723 42724 42725 C28242N00
ZM-PION Connector	stainless steel	silver silver silver silver silver black colored silver black colored silver black colored silver black colored silver black colored silver	42314 42316 42320 42718 42719 C28084C07 C28084N00 C28085C07 C28085N00 C28086C07 C28086N00 C28087C07 C28087N00 C28088C07 C28088N00
ZM-NA-PION Connector	stainless steel	silver	42315 42317 42321 42726 42727

RELATED ACCESSORIES > ELECTRONICS > SWITCHES

Name	Key features	IP protection rating	Ref.
Proximity switch UNI	- touchless switch - width only 7mm	20	E61579